HondaJet
Model HA-420

HJ1-29000-007-001
Volume 2 of 2

May 2017
Revision B3

QUICK REFERENCE HANDBOOK

EMERGENCY/ABNORMAL PROCEDURES

Copyright © Honda Aircraft Company 2016

INSERT LATEST REVISED PAGES,
DESTROY SUPERSEDED PAGES

LIST OF EFFECTIVE PAGES

Dates of issue for original and changed pages are:

Original	0	December 2015	Incorporates December 8, 2015 *AFM* Revision
Revision	A-1	March 2016	Incorporates March 31, 2016 *AFM* Revision
Revision	A2	July 2016	
Revision	B	October 2016	Incorporates October 30, 2016 *AFM* Revision
Revision	B1	December 2016	Incorporates December 23, 2016 *AFM* Revision
Revision	B2	March 2017	Incorporates March 3, 2017 *AFM* Revision
Revision	B3	May 2017	Incorporates May 1, 2017 *AFM* Revision

TOTAL NUMBER OF PAGES IN THIS PUBLICATION IS 242,
CONSISTING OF THE FOLLOWING:

Page No.	Revision No.	Page No.	Revision No.
Title	B3	A-1 – A-30	B
ii – iv	B3	A-31 – A-34	B2
E-1 – E-6	B	A-35	B
E-7	B3	A-36	B3
E-8 –E-20	B	A-37 – A-43	B
E-21 – E-23	B3	A-44	B3
E-24 – E-27	B	A-45 – A-51	B
E-28	B3	A-52	B3
E-29 – E-30	B	A-53 – A-56	B
E-31 – E-33	B3	A-57	B3
E-34 – E-36	B	A-58 – A-65	B
E-37	B3	A-66	B3
E-38 – E-47	B	A-67 – A-68	B
E-48	B3	A-69	B3
E-49 – E-50	B	A-70 – A-74	B
E-51 – E-53	B2	A-75 – A-77	B3
E-54	B	A-78 – A-79	B

Copyright © Honda Aircraft Co., LLC 2016
All Rights Reserved

Page No.	Revision No.
A-80 – A-81	B3
A-82 – A-87	B
A-88	B3
A-89	B
A-90	B3
A-91 – A-99	B
A-100	B3
A-101	B
A-102 – A-104	B3
A-105	B
A-106	B3
A-107	B
A-108	B3
A-109	B
A-110	B2
A-111 – A-112	B3
A-113 – A-115	B
A-116 – A-120	B3
A-121	B
A-122 – A-124	B3
A-125 – A-126	B
A-127	B3
A-128 – A-129	B
A-130	B3
A-131 – A-134	B
A-135 – A-136	B3
A-137 – A-138	B
AS-1 – AS-4	B
AS-5	B3
AS-6 – AS-10	B
AS-11 – AS-12	B3
AS-13 – AS-20	B
SI-1 – SI-25	B
SI-26	B3

PILOT NOTES

EMERGENCY CAS INDEX

CAS MESSAGES	TAB
CABIN ΔP HIGH	4
CABIN ALT HIGH	4
L(R) CABIN BLEED LEAK	5
ELEC EMER POWER	1
L(R) ENG BLEED LEAK	5
L(R) ENG EXCEEDANCE	2
L(R) ENGINE FIRE	12
L(R) ENGINE FLAMEOUT	2
L-R ENGINE FLAMEOUT	3
L(R) ENG OIL PRESS LOW	3
L(R) ENG VIBRATION HIGH	3
LDG GEAR UNSAFE	8
NORMAL BRAKES FAIL	8
TAKEOFF CONFIG	18
WING BLEED LEAK	6

PILOT NOTES

EMERGENCY PROCEDURES

TAB

ELECTRICAL SYSTEM

ELEC EMER POWER 1

ENGINES

L(R) ENG EXCEEDANCE 2
L(R) ENGINE FLAMEOUT

L-R ENGINE FLAMEOUT
L(R) ENG OIL PRESS LOW 3
L(R) ENG VIBRATION HIGH

ENVIRONMENTAL/PRESSURIZATION SYSTEMS

CABIN ΔP HIGH 4
CABIN ALT HIGH

L(R) CABIN BLEED LEAK 5
L(R) ENG BLEED LEAK

WING BLEED LEAK 6

FLIGHT CONTROLS

Flight Control Malfunction 7

LANDING GEAR AND BRAKES

LDG GEAR UNSAFE 8
NORMAL BRAKES FAIL

SMOKE OR FIRE

Smoke or Fire 9

Electrical Fire or Smoke 10

Environmental System Smoke or Odor 11

L(R) ENGINE FIRE 12

Continued on Page E-4

	TAB
OPERATIONAL	
Ditching	**13**
Emergency Descent Emergency Evacuation Inadvertent Overspeed	**14**
Operation with Emergency Power Only	**15**
Operation with #1 Buses Only	**16**
Operation with #2 Buses Only	**17**
Rejected Takeoff Stall Recovery Windshear or Terrain Avoidance TAKEOFF CONFIG	**18**
PFD / EIS / ASI FLAGS	**19**

EMERGENCY PROCEDURES

GENERAL

The procedures contained in this section have been developed by the manufacturer and approved by the certifying agency to provide a means to protect the occupants and the aircraft from harm during a critical situation requiring immediate response. Immediate actions which should be accomplished without reference to this manual are delineated by bold text within a red box.

Emergency procedures are grouped by functional system. Within each functional system area, the procedures are sorted by non-CAS procedures, CAS based, and other visual indications such as PFD flags. Each subgroup is sorted by alphabetical order.

Certain failures are capable of compromising multiple airplane systems. The pilot must respond directly to each annunciated or otherwise identified system failure and consult each specific Abnormal or Emergency procedure. For cases where multiple procedures specify different airplane configurations for continued safe flight and landing, the most restrictive must be used. If multiple procedures specify additional landing distance factors, each factor is additive and applied to the normal landing distance.

Some more complex emergency procedures have significant impact to the actions required to be followed during approach and landing. In these cases, the emergency procedure has been written to incorporate all applicable, normal procedure steps and allow the crew to use the single checklist all the way through landing.

Procedures are for use in flight unless other conditions are specifically called out. If not specifically addressed, while on the ground conditions addressed in this section must be corrected prior to flight, unless dispatch is allowed by an approved MEL or otherwise authorized by the appropriate aviation authority.

TERMINOLOGY

Sound judgment, a thorough knowledge of the aircraft, its characteristics, and the flight manual procedures are essential for handling any emergency situation. Some emergencies may compromise airworthiness or functionality, and therefore, the terms “land at nearest suitable airport” or “land as soon as possible” may be used which are defined as:

Land at nearest suitable airport – the mission should be terminated, and the aircraft landed at a suitable airfield. The airfield and duration of the flight is left to the aircrew’s discretion based on their specific circumstances. Considerations should include (but are not limited to):

- Severity of the emergency
- Aircraft performance
- Field facilities
- Weather
- Ambient conditions such as lighting
- Degraded aircraft functionality

Land as soon as possible – the mission should be terminated, and the aircraft landed as soon as possible. The same considerations apply when selecting a suitable airfield, but this term is used when prolonged flight is not recommended.

ELECTRICAL SYSTEM

ELEC EMER POWER

1

NOTE During ground operations, N_2 may need to be increased above 55% on the associated engine prior to cycling the generator switch to reset the generator.

1. **GENERATORS (one at a time).........OFF, then NORM**

If only one generator comes on

2. GENERATOR (inoperative side).................................OFF
3. Accomplish L(R) GENERATOR FAIL (Tab 19 – Abnormal Procedures)

— END OF PROCEDURE —

If neither generator comes on

2. GENERATOR.. Both OFF

NOTE The Cockpit Flood light may be used to provide cockpit illumination at night when operating on Emergency Power.

3. Accomplish OPERATION WITH EMERGENCY POWER ONLY (Tab 15 – Emergency Procedures)

— END OF PROCEDURE —

ENGINES

L(R) ENG EXCEEDANCE

2 **1. Thrust Lever (affected engine) .... Retard**

2. Engine Indications .... Monitor within limits

If engine parameters cannot be maintained within limits

3. Accomplish ENGINE PRECAUTIONARY SHUTDOWN IN FLIGHT (Tab 23 – Abnormal Procedures)

— END OF PROCEDURE —

L(R) ENGINE FLAMEOUT

DURING TAKEOFF (BELOW V_1 – TAKEOFF ABORTED)

1. Accomplish REJECTED TAKEOFF (Tab 18 – Emergency Procedures)

— END OF PROCEDURE —

DURING TAKEOFF (ABOVE V_1 – TAKEOFF CONTINUED)

1. Pitch Attitude .... Flaps TO/APPR – 10° Nose Up
   Flaps UP – 11° Nose Up

NOTE Flight Director TO mode pitch targets are automatically adjusted for flap position and engine failure.

2. Landing Gear (positive rate of climb)............................ UP
3. Airspeed.. Maintain V_2
4. Trim.. As required
5. Airspeed (1500 ft AGL or clear of obstacles) ....Accelerate to V_2 + 10

Procedure Continued

6. Flaps .... UP
7. Airspeed .... Accelerate to 140 KIAS
8. Continue planned takeoff flight path
9. Accomplish ENGINE PRECAUTIONARY SHUTDOWN IN FLIGHT (Tab 23 – Abnormal Procedures)

— END OF PROCEDURE —

DURING FLIGHT

1. Thrust Lever (affected engine) .... IDLE

NOTE Successful engine relight is indicated by steady increase of ITT and N_2 within 10 seconds.

If engine relights within 10 seconds

2. Thrust Lever (affected engine) .... As required following Stabilized idle

— END OF PROCEDURE —

If engine does not relight within 10 seconds

2. Thrust Lever (affected engine) .... CUT OFF

NOTE The **L(R) ENG CONTROL FAULT** message may post if wing anti-ice is active until WING FLOW is selected from the operable side.

3. Accomplish ENGINE PRECAUTIONARY SHUTDOWN IN FLIGHT (Tab 23 – Abnormal Procedures)

— END OF PROCEDURE —

L-R ENGINE FLAMEOUT

1. Thrust Levers .... IDLE

NOTE Successful engine relight is indicated by steady increase of ITT and N_2 within 10 seconds.

If one or both engines automatically relights within 10 seconds

2. Thrust Lever (affected engine) .... As required following Stabilized idle
3. Accomplish L(R) ENGINE FLAMEOUT (Tab 2 – Emergency Procedures), if required

— END OF PROCEDURE —

If neither engine automatically relights within 10 seconds

2. Thrust Levers .... CUTOFF
3. Airspeed .... 140 KIAS Minimum

CAUTION *To minimize the risk of rotor lock:*

- *Maintain airspeed above 140 KIAS to ensure core rotation.*
- *Following commanded or uncommanded inflight shutdown, maintain positive core rotation throughout the engine-out scenario. If core rotation has stopped, take action to achieve core rotation as soon as practical. Failure to maintain positive core rotation may preclude a successful start.*

4. Altitude .... Descend below 30,000 ft
5. Accomplish ENGINE AIRSTART (Tab 22 – Abnormal Procedures)

— END OF PROCEDURE —

L(R) ENG OIL PRESS LOW

1. Oil Pressure Indication (affected engine) .... Monitor

NOTE Aircraft negative-g maneuvers can cause temporary oil supply interruption resulting in low oil pressure indications (below redline) and an ENG OIL PRESS LOW messages. Engine operations below the oil pressure limits are permitted for a maximum of 15 seconds before engine shutdown is required.

If ENG OIL PRESS LOW message remains

2. Accomplish ENGINE PRECAUTIONARY SHUTDOWN IN FLIGHT (Tab 23 – Abnormal Procedures)

— END OF PROCEDURE —

L(R) ENG VIBRATION HIGH

1. Thrust Lever (affected engine) .... Slowly reduce thrust

NOTE If icing conditions were encountered, cycling Thrust Lever between IDLE and MCT may reduce engine vibration due to ice accumulation.

If vibration condition remains

2. Accomplish ENGINE PRECAUTIONARY SHUTDOWN IN FLIGHT (Tab 23 – Abnormal Procedures)

— END OF PROCEDURE —

ENVIRONMENTAL/ PRESSURIZATION SYSTEMS

CABIN ΔP HIGH

1. Oxygen Masks..DON
2. Crew Communications......................................Establish

NOTE Crew communications can be established by use of headsets, selecting cockpit speakers ON, or selecting the OXY MASK AUDIO switch to EMER.

3. CABIN INFLOW...L or R OFF
4. Altitude ....Descend to FL 250 or below
5. Land at nearest suitable airport

If cabin differential pressure remains high

6. Cycle remaining CABIN INFLOW between OFF and NORM as required to maintain differential pressure below 9.0 psid

If cabin differential pressure remains high

7. CABIN DUMP...DUMP
8. CABIN OXYGEN...................................... DROP MASK
9. Descend to 10,000 ft MSL or Minimum Safe Altitude, whichever is higher

If cabin differential pressure remains high

10. CABIN INFLOW... Both OFF

— END OF PROCEDURE —

CABIN ALT HIGH

"CABIN ALTITUDE"

1. **Oxygen Masks .... DON**
2. **OXY MASK AUDIO .... EMER**

NOTE "Cabin Altitude" aural alert will repeat every 30 seconds after acknowledgement via the Master Warning Switch.

NOTE If the airplane is above 25,000 ft MSL and the autopilot is engaged, it will automatically enter Emergency Descent Mode (EDM) when the CABIN ALT HIGH warning posts.

If cabin altitude greater than 15,000 ft

3. Accomplish EMERGENCY DESCENT (Tab 14 – Emergency Procedures)

— END OF PROCEDURE —

L(R) CABIN BLEED LEAK

1. **CABIN INFLOW (affected side) .... OFF**
2. Altitude ....Descend to FL 250 or below
3. Land at nearest suitable airport

If CABIN BLEED LEAK message remains

4. ENGINE BLEED (affected side)...................................OFF
5. WING FLOW........................... FROM R(L) (operable side)

If CABIN BLEED LEAK message remains

6. Accomplish ENGINE PRECAUTIONARY SHUTDOWN IN FLIGHT (Tab 23 – Abnormal Procedures)

— END OF PROCEDURE —

L(R) ENG BLEED LEAK

1. **ENGINE BLEED (affected side) .... OFF**

CAUTION *When operating on a single engine bleed with wing anti-ice ON above FL 340, large or sudden thrust changes may result in an ITT exceedance.*

NOTE The **L(R) ENG CONTROL FAULT** message may post if wing anti-ice is active until WING FLOW is selected from the operable side.

2. Altitude ....Descend to FL 250 or below
3. WING FLOW.......................... FROM R(L) (operable side)
4. Land at nearest suitable airport

5

If ENG BLEED LEAK message remains

5. Icing Conditions ....Exit
6. ENGINE ANTI-ICE (affected engine)..........................OFF

If ENG BLEED LEAK message remains

7. WING ANTI-ICE ....OFF

If ENG BLEED LEAK message remains

8. Thrust Lever (affected engine) .... IDLE

If ENG BLEED LEAK message remains

9. Accomplish ENGINE PRECAUTIONARY SHUTDOWN IN FLIGHT (Tab 23 – Abnormal Procedures)

— END OF PROCEDURE —

WING BLEED LEAK

1. WING ANTI-ICE .... OFF

2. Icing conditions...Exit

If WING BLEED LEAK message remains

3. L ENGINE BLEED ....OFF
4. Altitude ....Descend to FL 250 or below
5. Land at nearest suitable airport

If WING BLEED LEAK message remains

6. L ENGINE BLEED .... NORM
7. R ENGINE BLEED ....OFF

6

○ ***If no icing conditions are encountered prior to landing***

8. Land using normal procedures

— END OF PROCEDURE —

○ ***If wing protected surfaces cannot be confirmed to be free of ice, or icing conditions are expected during approach or landing***

8. Accomplish LANDING WITH ICE ACCUMULATION ON WINGS (Tab 45 – Abnormal Procedures)

— END OF PROCEDURE —

THIS PAGE INTENTIONALLY LEFT BLANK

FLIGHT CONTROLS

FLIGHT CONTROL MALFUNCTION

1. AFCS/TRIM MASTER............................Press and Hold

2. Airplane attitude .... Recover

If pitch anomaly

3. PITCH SERVO POWER..OFF
4. PITCH TRIM MODE .... STBY
5. AFCS/TRIM MASTER..Release
6. Adjust trim by use of the STANDBY PITCH switch
7. Yaw Damper... Engage
8. RVSM airspace ....Exit
9. Land at nearest suitable airport

— END OF PROCEDURE —

If roll anomaly

3. ROLL SERVO POWER...OFF
4. ROLL TRIM POWER ....OFF
5. AFCS/TRIM MASTER..Release
6. Yaw Damper... Engage
7. RVSM airspace ....Exit
8. Land at nearest suitable airport

— END OF PROCEDURE —

┌ **Procedure Continued** ┐

If yaw anomaly

3. YAW SERVO POWER ....OFF

NOTE The rudder bias system is inoperative. Rudder forces with one engine inoperative will increase.

4. YAW TRIM POWER..OFF
5. AFCS/TRIM MASTER...Release
6. Autopilot... As required

- ***If the autopilot is not available***

7. Altitude .... FL 240 or lower
8. Land at nearest suitable airport

— END OF PROCEDURE —

LANDING GEAR AND BRAKES

LDG GEAR UNSAFE

🔊 **“LANDING GEAR”**

NOTE “Landing Gear” aural alert will repeat every 10 seconds after acknowledgement via the Master Warning Switch.

1. LANDING GEAR ....DN
2. Landing Gear Indications .... Verify gear down and locked (three green)

If unsafe landing gear indications persist and both main gear are down and locked

3. Accomplish ALTERNATE GEAR RELEASE EXTENSION (Tab 41 – Abnormal Procedures)

— END OF PROCEDURE —

8

If unsafe landing gear indications persist and only one main gear is down and locked

3. LANDING GEAR .... UP
4. Accomplish ALTERNATE GEAR RELEASE EXTENSION (Tab 41 – Abnormal Procedures)

— END OF PROCEDURE —

NORMAL BRAKES FAIL

CAUTION *Anti-skid will not operate. Avoid cycling the brake handle. Approximately ten applications are available with a fully charged system.*

NOTE Gradually pull emergency brake handle until desired braking action is achieved.

NOTE Landing distance will increase by 50% on a dry runway and 100% on a wet runway

1. **EMERGENGY BRAKE .... Apply gradually**

— END OF PROCEDURE —

8

SMOKE OR FIRE

SMOKE OR FIRE

1. **Oxygen Masks........................DON and 100% OXYGEN**
2. **Smoke Goggles..DON**
3. **OXY MASK AUDIO... EMER**
4. **CABIN DUMP .... DUMP**

NOTE In the event of smoke or fire, prepare to land the aircraft without delay while completing fire suppression and/or smoke evacuation procedures. If it cannot be visually verified that the fire has been completely extinguished, whether the smoke has cleared or not, land immediately at the nearest suitable airfield or landing site.

NOTE Attempt to identify the source of the smoke or fumes. Electrical smoke is generally gray or tan in color and irritating to the nose and eyes. Environmental system smoke is usually white in color and less irritating.

NOTE The oxygen mask microphone will be turned off if the OXY MASK AUDIO switch is returned from EMER to NORM. The oxygen mask microphone can be re-enabled through the AUDIO AND RADIOS page on the CDU.

Procedure Continued

5. CABIN OXYGEN.. As required
6. Accomplish ELECTRICAL FIRE OR SMOKE
   (Tab 10 – Emergency Procedures), or
   ENVIRONMENTAL SYSTEM SMOKE OR ODOR
   (Tab 11 – Emergency Procedures) as appropriate.

— END OF PROCEDURE —

ELECTRICAL FIRE OR SMOKE

If source is known

1. Faulty Equipment .... Isolate

— END OF PROCEDURE —

If source is not known

1. Generators .... Both OFF

NOTE The Cockpit Flood light may be used to provide cockpit illumination at night when operating on Emergency Power, or on #1 Buses Only.

○ ***If smoke or fire decreases or ceases***

2. Accomplish OPERATION WITH EMERGENCY POWER ONLY (Tab 15 – Emergency Procedures)

— END OF PROCEDURE —

○ ***If smoke or fire persists***

2. L GENERATOR .... NORM
3. BUS TIE .... OPEN
4. BATTERY .... OFF
5. Left DISPLAY REVERSION .... REV
6. Left PFD Sensors .... AHRS 1, ADC 1

- ***If smoke or fire decreases or ceases***

7. Accomplish OPERATION WITH #1 BUSES ONLY (Tab 16 – Emergency Procedures)

— END OF PROCEDURE —

┌ **Procedure Continued** ┐

- ***If smoke or fire persists***

7. R GENERATOR .... NORM
8. Left PFD Sensors .... AHRS 2, ADC 2
9. L GENERATOR .... OFF

NOTE The Cockpit Map lights may be used to provide cockpit illumination at night when operating on #2 Buses Only.

➢ ***If smoke or fire decreases or ceases***

10. Accomplish OPERATION WITH #2 BUSES ONLY (Tab 17 – Emergency Procedures)

— END OF PROCEDURE —

➢ ***If smoke or fire persists***

10. L GENERATOR .... NORM
11. BUS TIE .... Normal
12. BATTERY .... NORM
13. Left DISPLAY REVERSION .... Normal
14. Left PFD Sensors .... AHRS 1, ADC 1

NOTE Repowering left side buses will result in the **L ENG VIBRATION HIGH** and **R ENG VIBRATION HIGH** messages posting briefly following touchdown.

15. Land as soon as possible

— END OF PROCEDURE —

ENVIRONMENTAL SYSTEM SMOKE OR ODOR

1. CABIN INFLOW..L OFF

If smoke or fire decreases or ceases

2. Altitude ....Descend to FL 250 or below
3. Land at nearest suitable airport

— END OF PROCEDURE —

If smoke persists

2. CABIN INFLOW....................................L NORM, R OFF

○ ***If smoke or fire decreases or ceases***

3. Altitude ....Descend to FL 250 or below
4. Land at nearest suitable airport

— END OF PROCEDURE —

○ ***If smoke persists***

3. CABIN INFLOW.. Both OFF
4. CABIN OXYGEN....................................... DROP MASK
5. Land as soon as possible
6. Accomplish EMERGENCY DESCENT (Tab 14 – Emergency Procedures)

— END OF PROCEDURE —

THIS PAGE INTENTIONALLY LEFT BLANK

L(R) ENGINE FIRE

“LEFT (RIGHT)
ENGINE FIRE”

1. **Thrust Lever (affected engine) ....IDLE**

If ENGINE FIRE indications still present after 15 seconds

2. **Thrust Lever (affected engine) ....CUT OFF**
3. **ENGINE FIRE PUSH**
   Switch (affected engine) ....Lift cover and PUSH
4. **FIRE EXT PUSH Switch (affected engine)............Push**

CAUTION *When operating on a single engine bleed with wing anti-ice ON above FL 340, large or sudden thrust changes may result in an ITT exceedance.*

NOTE The **L(R) ENG CONTROL FAULT** message may post if wing anti-ice is active until WING FLOW is selected from the operable side.

5. FUEL CROSSFEED .... As required
6. WING FLOW........................... FROM L(R) (operable side)
7. TCAS (TCAS II only) .... TA ONLY
8. ENGINE ANTI-ICE (affected engine)..........................OFF
9. Altitude ....Descend to FL 250 or below
10. Land at nearest suitable airport.
11. Accomplish SINGLE-ENGINE APPROACH AND LANDING (Tab 48 – Abnormal Procedures)

— END OF PROCEDURE —

┌ **Procedure Continued** ┐

If ENGINE FIRE indications are not still present after 15 seconds

2. Thrust Lever (affected engine)..................Maintain at IDLE
3. FUEL CROSSFEED ....As Required
4. WING FLOW............................FROM L(R) (operable side)

CAUTION *When operating on a single engine bleed with wing anti-ice ON above FL 340, large or sudden thrust changes may result in an ITT exceedance.*

5. TCAS (TCAS II only) .... TA ONLY
6. Land at nearest suitable airport
7. Accomplish SINGLE-ENGINE APPROACH AND LANDING (Tab 48 – Abnormal Procedures)

— END OF PROCEDURE —

OPERATIONAL

DITCHING

NOTE Ditching has not been demonstrated. However, the following procedures are recommended.

DESCENT

1. Airspeed....................................... 140 KIAS
2. Transponder 7700
3. ELT...ON
4. Brief and prepare passengers for ditching
5. CABIN SIGNS .... As required
6. Seat belts and harness .... Fastened
7. Cabin seats .... Positioned for landing
8. TAWS Warnings .... Disable

APPROACH

1. FLAPS............................ TO/APPR (if operable)
2. Landing Gear .... Do not extend
3. CABIN SIGNS .... As required

NOTE Ditch parallel to and near the crest of the swell unless there is a crosswind of 20 knots or more. In strong wind, heading should be more into the wind and slightly across the swell, planning to touch down on the upslope of the swell near the top.

Wave motion is indicative of wind direction, but the swell does not necessarily move with the wind. Water surface conditions are indicative of windspeed, as related below.

┌ **Procedure Continued** ┐

SURFACE CONDITION	WIND SPEED (KTS)
Few white crests	10 – 15
Many white crests	15 – 25
Streaks of foam from crests	25 – 35
Spray blown from tops of waves	35 – 45

LANDING

1. FLAPS..LDG (if operable)
2. CABIN DUMP...DUMP
3. ENGINE BLEED (Both)..OFF
4. Sink rate .... 200 – 300 ft/minute
5. GENERATOR.. Both OFF

AFTER LANDING

1. Touchdown .... Slightly nose high
2. Thrust Levers ....CUT OFF
3. Emergency Exit Door.................... Open, evacuate airplane

CAUTION *The lower edge of the Main Entrance Door should be above the waterline during calm seas. During rough seas only the Emergency Exit Door should be used.*

4. Main Entrance Door...................... Open, evacuate airplane

— END OF PROCEDURE —

EMERGENCY DESCENT EDM

1. **Thrust Levers ....IDLE**
2. **SPEEDBRAKE (if installed) .... EXT**

CAUTION *If structural damage is suspected, limit airspeed to a speed lower than V_{MO}/M_{MO} and limit maneuvering loads until damage assessment can be made.*

3. **Airspeed.. Maintain V_{MO}/M_{MO}**

CAUTION *Emergency Descent Mode (EDM) will automatically command a descent at V_{MO}/M_{MO}. If a lower speed is desired, the autopilot must be disengaged.*

NOTE EDM cannot guarantee a maximum rate of descent. The pilot must ensure the thrust levers are commanded to IDLE.

NOTE If the airplane is above 25,000 ft MSL, and the autopilot is engaged, it will automatically enter EDM when the **CABIN ALT HIGH** warning message posts.

4. Transponder 7700
5. CABIN OXYGEN.................... DROP MASK (as required)
6. CABIN SIGNS ....ON
7. ATC ....Notify and obtain local altimeter setting
8. Descend to 10,000 ft MSL or Minimum Safe Altitude, whichever is higher

Procedure Continued

9. Land at nearest suitable airport

NOTE EDM will automatically set the altitude preselector to 15,000 ft.

— END OF PROCEDURE —

EMERGENCY EVACUATION

1. PARKING BRAKE .... Set
2. Thrust Levers .... CUT OFF
3. ENGINE FIRE PUSH Switches .... Lift cover and PUSH
4. FIRE EXT PUSH Switch .... Push (if required)
5. BATTERY .... OFF
6. Evacuate the aircraft using the cabin door and/or the emergency exit

— END OF PROCEDURE —

INADVERTENT OVERSPEED 🔊 *Warble Tone*

1. Thrust Levers .... IDLE
2. SPEEDBRAKE (if installed) .... EXT
3. Perform wings level pull-up

NOTE AFCS Overspeed Protection (OSP) mode will engage when speed exceeds 276 KIAS or M 0.73 if the Flight Director is active and the vertical mode is not ALT. OSP will command a 1.5g pull until speed decreases to below 267 KIAS/M 0.715.

— END OF PROCEDURE —

OPERATION WITH EMERGENCY POWER ONLY

NOTE When selected on, the Cockpit Flood light provides illumination during all electrical system configurations and may be used when executing this procedure at night.

1. Icing Conditions .... Exit

CAUTION *Windshield heat, wing anti-ice, and tail de-ice systems are not available when operating with emergency power only.*

2. L PFD .... Verify displaying AHRS 1 and STBY ADC
3. Radio .... COM 1

NOTE COM 1, NAV 1 and 2, and GPS are the only communication and navigation sources available on emergency power.

4. Navigation .... NAV 1 or 2, or GPS based only
5. Transponder .... Verify XPDR 1
6. SPEEDBRAKE (if installed) .... RET
7. PRESSURIZATION CONTROL MODE .... HOLD
8. RVSM airspace .... Exit
9. Land as soon as possible

NOTE A minimum of 60 minutes of operation on battery power has been demonstrated.

DESCENT

1. Altimeters (transition altitude) .... Set

┌ **Procedure Continued** ┐

APPROACH

1. Seats and Seat Belts ....Adjusted and secure
2. Passenger Briefing...Complete
3. Avionics.. Set
4. Landing Data...Set and confirmed
    a. Radios and Navigation... Set

NOTE COM 1, NAV 1 and 2, and GPS are the only communication and navigations sources available on emergency power.

15

    b. V-speeds, FMS, and Flight Guidance...................... Set, programmed, and modes selected
    c. Landing Distance..Confirm

Flap Setting	Min Approach Speed	Landing Distance
LDG	V_{REF} + 5	Add 10%

NOTE Due to the stall pusher being inoperative, the minimum approach speed and landing distance factors are defined in the table.

NOTE If icing conditions cannot be avoided, reference LANDING WITH ICE ACCUMULATION ON WINGS (Tab 45 – Abnormal Procedures) and SIDE WINDOW LANDING (Tab 47 – Abnormal Procedures).

5. CAS Messages...Check
6. Approach Briefing..Complete
7. LANDING Light...ON
8. FLAPS.. TO/APPR

┌ **Procedure Continued** ┐

OPERATION WITH EMERGENCY POWER ONLY (Cont)

BEFORE LANDING

1. Landing Gear .... Alternate extension
    a. LDG GEAR CTRL circuit breaker .... PULL (B7)
    b. LANDING GEAR .... DN
    c. Airspeed.. 150 KIAS minimum
    d. ALTERNATE GEAR RELEASE handle........ Pull fully
    e. Yaw airplane, if necessary, to obtain gear locked down
    f. LANDING GEAR indicator....... Verify three green DN

NOTE The gear DOOR icon will remain posted but a normal landing is possible without gear door-ground contact.

    g. ALTERNATE GEAR RELEASE handle............... Stow

CAUTION *The ALTERNATE GEAR RELEASE handle could interfere with thrust lever operation if not stowed following use.*

NOTE Normal landing gear operations cannot be restored in flight after activation of the alternate gear release.

2. FLAPS.. LDG
3. Airspeed .... $V_{REF} + 5$
4. CABIN DUMP... DUMP

WARNING **The airplane must be unpressurized prior to landing.**

┌ **Procedure Continued** ┐

LANDING

1. Thrust Levers .... IDLE
2. Brakes.. Apply (after touchdown)
3. SPEEDBRAKE (if installed) .... EXT

NOTE Speedbrake may not be operational, or the deflection may be reduced depending on the system and normal accumulator pressure at the time of landing.

FOLLOWING LANDING ROLLOUT

CAUTION *Following landing rollout, the emergency and brake accumulators may drop below the level required for nosewheel steering and braking.*

1. Do not taxi
2. Wheel chocks .... Install

Procedure Continued

The following equipment is OPERATIVE for a limited time	
COMMUNICATION	
L and R Intercom	COM 1
NAVIGATION/AFCS	
L PFD (using Standby Air Data) NAV 1 Transponder 1 AHRS 1 Standby AHRS and ADC Low Speed Awareness (Degraded Mode)	MFD L CDU NAV 2 Standby Instrument GPS Rudder Bias
ENGINE	
Engines* Engine Instruments Fire Detection Vibration Detection	FADEC Control* Ignition Fire Extinguishers
FLIGHT CONTROL	
Normal Flight Controls* Flaps	All Trim
LANDING GEAR AND BRAKES	
Landing Gear (alternate extension)* Hydraulic Pump (ground only) Parking Brake (accumulator) Nosewheel Steering (accumulator)*	Normal Brakes (accumulator)* Anti-Skid (if normal brakes available) Emergency Brake (accumulator)*
FUEL	
Fuel Pumps Fuel Quantity Indications Fuel Crossfeed	Fuel Shutoff Valves Fuel Low Level Sensors
ENVIRONMENTAL	
Engine Bleed Dump Mode Bleed Leak Detection	Pressurization (HOLD Mode) Oxygen*
ICE PROTECTION	
Ice Detection Engine Anti-ice (failed on)	Standby Probe Heat
LIGHTING	
Cockpit Flood Lights L Landing Light	L Ice Inspection Light Footwell Lights

NOTE * These items do not require aircraft electrical power to operate and are not time limited.

— END OF PROCEDURE —

THIS PAGE INTENTIONALLY LEFT BLANK

OPERATION WITH #1 BUSES ONLY

1. Thrust Levers .... Avoid rapid movements

CAUTION *When operating on a single engine bleed with wing anti-ice ON above FL 340, large or sudden thrust changes may result in an ITT exceedance.*

NOTE The **L(R) ENG CONTROL FAULT** message may post if wing anti-ice is active until WING FLOW is selected from the operable side.

2. Icing Conditions ....Exit
3. Radio .... COM 1

NOTE Copilot will lose all communication capability.

4. Navigation ....NAV 1 or GPS

NOTE COM 1, NAV 1, and GPS are the only communication and navigation sources available during #1 bus only operation.

5. Transponder .... Verify XPDR 1
6. R WINDSHIELD HEAT ....OFF
7. R ENGINE BLEED ....OFF
8. WING FLOW...FROM L
9. PRESSURIZATION CONTROL MODE................. HOLD
10. Altitude ....Descend to FL 250 or below
11. Land at nearest suitable airport

┌ **Procedure Continued** ┐

DESCENT

1. Altimeters (transition altitude) .... Set

APPROACH

1. Seats and Seat Belts ....Adjusted and secure
2. Passenger Briefing..Complete
3. Avionics... Set
4. Landing Data...Set and Confirmed
    a. Radios and Navigation.. Set
    b. V-speeds, FMS, and Flight Guidance .... Set, programmed, and modes selected

c. Landing Distance ....Confirm

Flap Setting	Min Approach Speed	Landing Distance
LDG	$V_{REF} + 5$	Add 10%

NOTE Due to the stall pusher being inoperative, the minimum approach speed and landing distance factors are defined in the table.

NOTE If icing conditions cannot be avoided, reference LANDING WITH ICE ACCUMULATION ON WINGS and SIDE WINDOW LANDING (Tab 45 – Abnormal Procedures).

5. CAS Messages...Check
6. Approach Briefing..Complete
7. FLAPS... TO/APPR

┌ **Procedure Continued** ┐

OPERATION WITH #1 BUSES ONLY (Cont)

BEFORE LANDING

1. LANDING GEAR ....DN

NOTE Hydraulic pressure indications will be unavailable during #1 bus operation, but the hydraulic pump will be operable.

2. Cabin Differential Pressure .... Verify less than 0.3 psi
3. CABIN DUMP.................................... DUMP (if required)

WARNING **The airplane must be unpressurized prior to landing.**

4. FLAPS.. LDG
5. Airspeed.. $V_{REF} + 5$
6. Autopilot/Yaw Damper .... Disengage

LANDING

1. Thrust Levers .... IDLE
2. Brakes.. Apply (after touchdown)

┌ **Procedure Continued** ┐

The following equipment will be INOPERATIVE during #1 bus only operations	
COMMUNICATION	
COM 2	R Audio
NAVIGATION/AFCS	
R PFD R CDU AHRS 2 and ADC 2 ADF Transponder 2 Radio Altimeter SATCOM/Connext™ Weather	MFD TCAS II NAV 2 CVFDR DME Weather Radar Stall Pusher
ENGINE	
Right Oil Temperature R Fire Extinguisher	R Fire Detection Vibration Detection
FLIGHT CONTROL	
Standby Pitch Trim	Speedbrake
LANDING GEAR AND BRAKES	
Hydraulic (indication)	
FUEL	
R Fuel Low Level Sensor R Fuel Quantity R Fuel Pump	Fuel Crossfeed R Fuel Shutoff Valve
ENVIRONMENTAL	
Air Conditioner R Engine Bleed Pressure Control (normal)	R Bleed Leak Detection Cabin Oxygen Automatic Deployment Oxygen Quantity (Ind) Cabin Fan
ICE PROTECTION	
R Wing Anti-ice Valve R Windshield Zone Heat Ice Detector 2	R Engine Anti-ice (failed on) Right Probe Heat
LIGHTING	
R Landing Light Logo Lights RECOG Lights Cockpit Map Lights Copilot Footwell Light Ice Inspection Lights	Strobe Lights Taxi Lights NAV Lights Cabin Overhead Lights Cabin Signs

— END OF PROCEDURE —

OPERATION WITH #2 BUSES ONLY

1. PITCH TRIM MODE .... STBY
2. Thrust Levers .... Avoid rapid movements

CAUTION *When operating on a single engine bleed with wing anti-ice ON above FL 340, large or sudden thrust changes may result in an ITT exceedance.*

NOTE The **L(R) ENG CONTROL FAULT** message may post if wing anti-ice is active until WING FLOW is selected from the operable side.

3. Icing Conditions ....Exit
4. Radio .... COM 2

CAUTION *Pilot will not hear intercom or alerts through headset, but alerts will be automatically routed to cross-side speaker. Speaker volume may need to be adjusted to ensure alerts can be heard while wearing headset.*

NOTE The pilot's boom mic, or oxygen mask mic is automatically routed to COM 2 for communication with ATC.

NOTE Marker beacon functionality (aural and visual) will be inoperative on the pilot's side.

5. Navigation ....NAV 2 or GPS

NOTE COM 2, NAV 2, and GPS are the only communication and navigation sources available for #2 bus only operation.

┌ **Procedure Continued** ┐

6. Transponder ....XPDR 2 (if applicable) or notify ATC
7. L WINDSHIELD HEAT ....OFF
8. L ENGINE BLEED ....OFF
9. WING FLOW.. FROM R
10. Altitude ....Descend to FL 250 or below
11. NOSE WHEEL STEERING...OFF
12. Select a long, wide, and dry runway with minimal crosswind

WARNING **Anti-skid is not available. Any braking above light in wet runway conditions could result in blown tires and loss of directional control.**

CAUTION *Nose wheel steering is inoperative. Crosswinds should be minimized to ensure adequate directional control during the low-speed portion of the rollout using differential braking.*

NOTE Landing distance will double on a wet runway using light braking.

13. Land at nearest suitable airport

NOTE Stall Pusher is inoperative. Low Speed Awareness remains operative in a degraded mode based on remaining ADC AOA data.

DESCENT

1. Landing Field Elevation .... Verify set
2. Altimeters (transition altitude)....................................... Set

┌ **Procedure Continued** ┐

OPERATION WITH #2 BUSES ONLY (Cont)

APPROACH

1. Seats and Seat Belts ....Adjusted and secure
2. Passenger Briefing..Complete
3. Avionics.. Set
4. Landing Data...Set and confirmed
   a. Radios and Navigation... Set
   b. V-speeds, FMS, and Flight Guidance .... Set, programmed, and modes selected
   c. Landing Distance...Confirm

Flap Setting	Min Approach Speed	Landing Distance
UP	$V_{REF} + 20$	Add 105%
TO/APPR	$V_{REF} + 10$	Add 75%
LDG	$V_{REF} + 5$	Add 60%

NOTE Flaps are inoperative during #2 bus only operation. The flap setting at the time #2 bus only operation was initiated will be the final flap setting.

NOTE Due to anti-skid and the stall pusher being inoperative, the minimum approach speed and landing distance factors are defined in the table.

NOTE Landing distance will double on a wet runway using light braking.

NOTE If icing conditions cannot be avoided, reference LANDING WITH ICE ACCUMULATION ON WINGS and SIDE WINDOW LANDING (Tab 45 – Abnormal Procedures).

┌ **Procedure Continued** ┐

5. CAS Messages..Check
6. Approach Briefing..Complete

BEFORE LANDING

1. Landing Gear .... Alternate Extension
   a. LDG GEAR CTRL circuit breaker ....PULL (B7)
   b. LANDING GEAR..DN
   c. Airspeed....................................... 150 KIAS minimum
   d. ALTERNATE GEAR RELEASE handle........Pull fully
   e. Yaw airplane, if necessary, to obtain gear locked down
   f. LANDING GEAR indicator....... Verify three green DN

NOTE The gear DOOR icon will remain posted but a normal landing is possible without gear door-ground contact.

   g. ALTERNATE GEAR RELEASE handle............... Stow

CAUTION *The ALTERNATE GEAR RELEASE handle could interfere with thrust lever operation if not stowed following use.*

NOTE Normal landing gear operations cannot be restored in flight after activation of the alternate gear release.

2. Airspeed..(Flaps UP) – V_{REF} + 20
   (Flaps TO/APPR) – V_{REF} + 10
   (Flaps LDG) – V_{REF} + 5
3. Yaw Damper... Disengage

┌ **Procedure Continued** ┐

OPERATION WITH #2 BUSES ONLY (Cont)

LANDING

1. Thrust Levers .... IDLE

CAUTION *Brakes must be applied gradually. Light to moderate braking can be applied without skidding tires on a dry surface, however, the pilot should consider runway surface conditions when applying brakes.*

2. Brakes.. Apply gradually
3. Maintain directional control with rudder and differential braking.

FOLLOWING LANDING ROLLOUT

1. R ENGINE BLEED .... OFF

CAUTION *Following landing rollout, the emergency and brake accumulators may drop below the level required for braking.*

2. Do not taxi
3. Wheel chocks .... Install

Procedure Continued

The following equipment will be INOPERATIVE during #2 bus only operations	
COMMUNICATION	
COM 1	L Audio
NAVIGATION/AFCS	
Autopilot AHRS 1 and ADC 1 Standby Instrument Transponder 1 Standby AHRS and ADC Weather Radar Stall Pusher Low Speed Awareness (degraded mode)	L PFD XM Weather NAV 1 Control Yoke System Control L CDU TCAS SATCOM/Connext™ Weather
ENGINE	
L Engine Instruments L Fire Extinguisher	L Fire Detection
FLIGHT CONTROL	
Pitch (primary), Roll and Yaw Trim Flaps	Speedbrake
LANDING GEAR AND BRAKES	
Landing Gear (normal extension) Hydraulic Pump	Anti-Skid Nosewheel Steering
FUEL	
L Fuel Pump Left Fuel Quantity Center Fuel Quantity	L Fuel Shutoff Valve Left Fuel Low Level Sensor
ENVIRONMENTAL	
Left Engine Bleed Cockpit Fan Air Conditioner	L Bleed Leak Detection Ground Cooling Fan
ICE PROTECTION	
Ice Detector 1 Standby Probe Heat L Windshield Zone Heat	L Engine Anti-ice (failed on) L Wing Anti-ice Valve L Probe Heat
LIGHTING	
Beacon Cabin Overhead Lights Cockpit Flood Light Footwell Lights Ice Inspection Lights	L Landing Light Cabin Signs NAV Lights Right Taxi Light

— END OF PROCEDURE —

REJECTED TAKEOFF

1. **Thrust Levers ....IDLE**
2. **Brakes .... Apply maximum braking**
3. **SPEEDBRAKE (if installed) .... EXT**

NOTE Consult the Aircraft Maintenance Manual (AMM) for required maintenance actions if a rejected takeoff is conducted above 100 knots ground speed.

— END OF PROCEDURE —

18

STALL RECOVERY

STALL

1. Pitch Attitude .... Lower to reduce angle of attack
2. Thrust Levers .... TO
3. Level the wings
4. Airspeed .... Accelerate above stall condition

--- END OF PROCEDURE ---

WINDSHEAR OR TERRAIN AVOIDANCE

PULL UP

WINDSHEAR

1. Pitch Attitude .... 15° initially
2. Thrust Levers .... TO
3. Do not change gear or flap configuration
4. Pitch Attitude ...... Adjust to maintain close to shaker speed

— END OF PROCEDURE —

TAKEOFF CONFIG

🔊 *“TAKEOFF CONFIGURATION”*

NO TAKEOFF

1. Accomplish REJECTED TAKEOFF (Tab 18 – Emergency Procedures)

— END OF PROCEDURE —

PFD/EIS/ASI FLAGS

Display Flag / Indication	Description
AFCS	
AP	The autopilot has disconnected abnormally. This alert is accompanied by continuous disconnect aural tones. These alerts will repeat continuously until acknowledged. Refer to the Cockpit Reference Guide for details.
SurfaceWatch	
19 RWY TOO SHORT	The aircraft is aligned with a runway during takeoff or landing that is too short, as determined by the SurfaceWatch. This is accompanied by the “Runway Too Short” aural alert. Refer to the Cockpit Reference Guide for details.
TWY LANDING	The aircraft is aligned with a taxiway during the landing phase, as detected by the SurfaceWatch. This is accompanied by the “Taxiway” aural alert. Refer to the Cockpit Reference Guide for details.
TWY TAKEOFF	The aircraft is aligned with a taxiway and thrust levers are set to TO, as detected by the SurfaceWatch. This is accompanied by the “Taxiway” aural alert. Refer to the Cockpit Reference Guide for details.

┌ **Procedure Continued** ┐

Traffic Collision and Avoidance System (TCAS)	
TRAFFIC	Resolution Advisory (RA) is active. A potentially hazardous intruding aircraft has been detected and is closing to within 15-35 seconds of a potential collision area. An appropriate aural alert is also issued, providing the flight crew with maneuver instructions to avoid the hazardous traffic. This alert is only applicable to TCAS II installations. Refer to the Cockpit Reference Guide for details.

PILOT NOTES

ABNORMAL CAS INDEX

CAS MESSAGES	TAB
AFCS MISTRIM	1
AFT BAG DOOR UNSAFE	11
1(2) AHRS FAIL	1
1(2) AIR DATA FAIL	1
ANTI-SKID FAIL	42
L(R) AUDIO FAIL	2
AVIONICS COMPUTER 1 FAIL	2
AVIONICS COMPUTER 2 FAIL	3
BATTERY BUS 1 FAIL	13
BATTERY BUS 1A FAIL	14
BATTERY BUS 1B FAIL	15
BATTERY BUS 1C FAIL	16
BATTERY BUS 2 FAIL	16
BATTERY BUS 2A FAIL	17
BATTERY BUS 2B FAIL	18
BATTERY BUS 2C FAIL	19
BUS TIE FAIL	19
CABIN ALT CTRL FAIL	27
CABIN ALT CTRL FAULT	27
CABIN ALT HIGH FIELD	27
L(R) CABIN BLEED FAIL	27
L(R) CABIN BLEED TEMP HIGH	28
CABIN DOOR UNSAFE	11
CABIN OXYGEN OFF	27
CPDLC FAIL	3

Continued on Page A-2

CAS MESSAGES	TAB
DATA ACQUISITION 1 FAIL	4
DATA ACQUISITION 2 FAIL	5
DATA ACQUISITION 3 FAIL	6
DATA CONCENTRATOR 1 FAIL	7
DATA CONCENTRATOR 2 FAIL	8
ECS AIR COND FAIL	28
ECS GND COOLING FAN FAIL	28
EMER EXIT DOOR UNSAFE	11
L(R) ENG ANTI-ICE FAIL	34
L(R) ENG BLEED FAIL	28
L(R) ENG CONTROL FAIL	24
L(R) ENG CONTROL FAULT	25
L-R ENG FUEL BYPASS	25
L(R) ENG OIL TEMP HIGH	25
L(R) ENG OVERSPD PROT FAIL	26
L(R) ENG START FAIL	24
EXT PWR DOOR UNSAFE	11
L(R) FIRE DETECTOR FAIL	26
FLAP FAIL	30
FLAP FAULT	30
FLT DIR MODE CHANGE	8
FUEL CROSSFEED	31
FUEL CROSSFEED FAIL	31
FUEL IMBALANCE	31
FUEL LEVEL CTRL FAULT	31
L-R FUEL PRESSURE LOW	32
L(R) FUEL PRESSURE LOW	32

CAS MESSAGES	TAB
L(R) FUEL PUMP FAIL	32
FUEL QTY FAULT	33
L-R FUEL QTY LOW	33
L(R) FUEL QTY LOW	33
FUEL TEMP HIGH	33
FUEL TEMP LOW	33
FWD BAG DOOR UNSAFE	12
L(R) GENERATOR FAIL	19
L(R) GENERATOR OVERLOAD	20
HYD PRESSURE LOW	34
HYD PUMP FAIL	34
ICE DETECT FAIL	35
ICE PROT NOT ACTIVE	36
LDG GEAR FAIL	42
MAIN BUS 1 FAIL	20
MAIN BUS 2 FAIL	21
NO LDG FIELD ELEV	29
NOSEWHEEL STEER FAIL	43
OXYGEN LOW	29
OXYGEN QTY FAIL	29
OXYGEN UNAVAILABLE	29
PARK BRAKE FAIL	43
PARK BRAKE ON	44
PITCH TRIM FAIL	30
L(R) PROBE HEAT FAIL	36
RUDDER BIAS FAIL	9

Continued on Page A-4

CAS MESSAGES		TAB
	SPEEDBRAKE EXTENDED	30
	STALL PUSHER FAIL	9
	STALL WARN MISCOMP	9
	STBY PROBE HEAT FAIL	36
	TAIL DE-ICE FAIL	37
	TRANSPONDER MODE	9
L-R	WING A/I TEMP LOW	38
	WING ANTI-ICE FAIL	37
	WING ANTI-ICE FAIL ON	37
L(R)	WING ANTI-ICE OVERHEAT	37
L(R)	WING ANTI-ICE TEMP LOW	39
	WING ANTI-ICE UNAVAIL	40
L(R)	WSHD ZONE FAIL	40
L(R)	WSHD ZONE OVERHEAT	40
	YAW DAMPER FAIL	10
	YAW DAMPER OFF	10

ABNORMAL PROCEDURES

AVIONICS/AFCS

	TAB
Primary Flight or Multi-Function Display Failure AFCS MISTRIM AHRS 1(2) FAIL AIR DATA 1(2) FAIL	1
L(R) AUDIO FAIL AVIONICS COMPUTER 1 FAIL	2
AVIONICS COMPUTER 2 FAIL CPDLC FAIL	3
DATA ACQUISITION 1 FAIL	4
DATA ACQUISITION 2 FAIL	5
DATA ACQUISITION 3 FAIL	6
DATA CONCENTRATOR 1 FAIL	7
DATA CONCENTRATOR 2 FAIL FLT DIR MODE CHANGE	8
RUDDER BIAS FAIL STALL PUSHER FAIL STALL WARN MISCOMP TRANSPONDER MODE	9
YAW DAMPER FAIL YAW DAMPER OFF PFD/EIS/ASI Flags	10

Continued on Page A-6

	TAB
DOORS	
AFT BAG DOOR UNSAFE CABIN DOOR UNSAFE EMER EXIT DOOR UNSAFE EXT PWR DOOR UNSAFE	11
FWD BAG DOOR UNSAFE	12
ELECTRICAL SYSTEMS BATTERY BUS 1 FAIL	13
BATTERY BUS 1A FAIL	14
BATTERY BUS 1B FAIL	15
BATTERY BUS 1C FAIL BATTERY BUS 2 FAIL	16
BATTERY BUS 2A FAIL	17
BATTERY BUS 2B FAIL	18
BATTERY BUS 2C FAIL BUS TIE FAIL L(R) GENERATOR FAIL	19
L(R) GENERATOR OVERLOAD MAIN BUS 1 FAIL	20
MAIN BUS 2 FAIL	21
ENGINE SYSTEMS Engine Airstart	22
Engine Precautionary Shutdown in Flight	23
L(R) ENG START FAIL Engine Start Abort Engine Tailpipe Fire After Shutdown L(R) ENG CONTROL FAIL	24

	TAB
L(R) ENG CONTROL FAULT L-R ENG FUEL BYPASS L(R) ENG OIL TEMP HIGH	25
L(R) ENG OVERSPD PROT FAIL L(R) FIRE DETECTOR FAIL	26

ENVIRONMENTAL/PRESSURIZATION SYSTEMS

	TAB
Cracked Windshield or Window CABIN ALT CTRL FAIL CABIN ALT CTRL FAULT CABIN ALT HIGH FIELD L(R) CABIN BLEED FAIL CABIN OXYGEN OFF	27
L(R) CABIN BLEED TEMP HIGH ECS AIR COND FAIL ECS GND COOLING FAN FAIL L(R) ENG BLEED FAIL	28
NO LDG FIELD ELEV OXYGEN LOW OXYGEN QTY FAIL OXYGEN UNAVAILABLE	29

FLIGHT CONTROLS

	TAB
FLAP FAIL FLAP FAULT PITCH TRIM FAIL SPEEDBRAKE EXTENDED	30

FUEL SYSTEMS

	TAB
FUEL CROSSFEED FUEL CROSSFEED FAIL FUEL IMBALANCE FUEL LEVEL CTRL FAULT	31

Continued on Page A-8

	TAB
L-R FUEL PRESSURE LOW L(R) FUEL PRESSURE LOW L(R) FUEL PUMP FAIL	32
FUEL QTY FAULT L-R FUEL QTY LOW L(R) FUEL QTY LOW FUEL TEMP HIGH FUEL TEMP LOW	33
HYDRAULIC SYSTEMS HYD PUMP FAIL HYD PRESSURE LOW **ICE PROTECTION SYSTEMS** L(R) ENG ANTI-ICE FAIL	34
ICE DETECT FAIL	35
ICE PROT NOT ACTIVE L(R) PROBE HEAT FAIL STBY PROBE HEAT FAIL	36
TAIL DE-ICE FAIL WING ANTI-ICE FAIL WING ANTI-ICE FAIL ON L(R) WING ANTI-ICE OVERHEAT	37
L-R WING A/I TEMP LOW	38
L(R) WING ANTI-ICE TEMP LOW	39
WING ANTI-ICE UNAVAIL L(R) WSHD ZONE FAIL L(R) WSHD ZONE OVERHEAT	40
LANDING GEAR AND BRAKES Alternate Gear Release Extension	41

TAB

ANTI-SKID FAIL
LDG GEAR FAIL 42

NOSEWHEEL STEER FAIL
PARK BRAKE FAIL 43

PARK BRAKE ON 44

OPERATIONAL

Cabin System Shedding 44

Landing with Ice Accumulation on Wings 45

Reduced Flap Landing 46

Side Window Landing 47

Single-Engine Approach and Landing 48

Single-Engine Missed Approach 49

ABNORMAL PROCEDURES

GENERAL

The procedures contained in this section have been developed to provide a means to maintain an acceptable level of airworthiness or reduce operational risk resulting from a failure condition.

Abnormal procedures are grouped by functional system. Within each functional system area, the procedures are sorted by non-CAS procedures, CAS based, and other visual indications such as PFD flags. Each subgroup is sorted by alphabetical order.

Certain failures are capable of compromising multiple airplane systems. The pilot must respond directly to each annunciated or otherwise identified system failure and consult each specific Abnormal or Emergency procedure. For cases where multiple procedures specify different airplane configurations for continued safe flight and landing, the most restrictive must be used. If multiple procedures specify additional landing distance factors, each factor is additive and applied to the normal landing distance.

Procedures are for use in flight unless other conditions are specifically called out. If not specifically addressed while on the ground, conditions addressed in this section must be corrected prior to flight, unless dispatch is allowed by an approved MEL or otherwise authorized by the appropriate aviation authority.

TERMINOLOGY

Sound judgment, a thorough knowledge of the aircraft, its characteristics, and the flight manual procedures are essential for handling any abnormal situation. Some failures may compromise airworthiness or functionality, and therefore, the term "land at nearest suitable airport" may be used, which is defined as:

Land at nearest suitable airport – the mission should be terminated, and the aircraft landed at a suitable airfield. The airfield and duration of the flight is left to the aircrew's discretion based on their specific circumstances. Considerations should include (but are not limited to):

- Severity of the emergency
- Aircraft performance
- Field facilities
- Weather
- Ambient conditions such as lighting
- Degraded aircraft functionality

AVIONICS/AFCS

PRIMARY FLIGHT or MULTI-FUNCTION DISPLAY FAILURE

LEFT PFD FAILED

1. DISPLAY REVERSION (pilot side) .... REV

— END OF PROCEDURE —

RIGHT PFD FAILED

1. Transfer controls to left seat pilot

— END OF PROCEDURE —

MFD FAILED

1. DISPLAY REVERSION (pilot flying)......................... REV

— END OF PROCEDURE —

AFCS MISTRIM

1. Flight Controls ....Hold firmly

NOTE Expect high flight control forces when autopilot is disengaged. Axis and direction of mistrim is indicated by flag in upper left hand corner of the PFD.

2. Trim aircraft as necessary
3. Yaw Damper ....Engage as required
4. Autopilot ....Engage as required 1

— END OF PROCEDURE —

AHRS 1(2) FAIL

If system does not automatically revert to operable AHRS

1. PFD (affected side).......................... Select operable AHRS

— END OF PROCEDURE —

AIR DATA 1(2) FAIL

1. PFD (affected side)............. Ensure operable ADC selected
2. RVSM airspace...Exit
3. Do not perform intentional stalls

NOTE Stall Pusher is inoperative. Stall Warning remains operative based on remaining ADC AOA data.

PRIOR TO LANDING

3. Final approach speed.. $V_{REF} + 5$

Flap Setting	Min Approach Speed	Landing Distance
LDG	$V_{REF} + 5$	Add 10%
TO/APPR (ice)	$V_{REF} + 5$	Add 10%

NOTE Due to the stall pusher being inoperative, the minimum approach speed and landing distance factor are defined in the table.

— END OF PROCEDURE —

L(R) AUDIO FAIL

1. Headset (affected side) .... Don
2. Speaker Volume (opposite side) ....Adjust

CAUTION *Pilot with failed audio will not hear intercom or alerts through headset, but alerts will be automatically routed to cross-side speaker. Speaker volume may need to be adjusted to ensure alerts can be heard while wearing headset.*

NOTE The handheld microphone, speaker and oxygen mask mic on the failed side are inoperative.

NOTE The audio system on the failed side will default to use of the onside radio only at a fixed volume.

NOTE Marker beacon functionality (aural and visual) will be inoperative on the failed side.

— END OF PROCEDURE —

AVIONICS COMPUTER 1 FAIL

1. Radio .... COM 2
2. Navigation ....Select NAV 2 or GPS
3. Transponder............. Ensure operating transponder selected
4. Do not perform intentional stalls

NOTE Stall Pusher is inoperative. Stall Warning remains operative based on available valid ADC AOA data.

┌ **Procedure Continued** ┐

NOTE Failure of Avionics Computer 1 will cause associated failures which will result in the following CAS messages:

FLAP FAULT ,
NOSEWHEEL STEER FAULT ,
TAIL DEICE FAULT .

The procedures for those messages should be followed in addition to this procedure.

PRIOR TO LANDING

5. Final approach speed.. $V_{REF} + 5$

Flap Setting	Min Approach Speed	Landing Distance
LDG	$V_{REF} + 5$	Add 10%
TO/APPR (ice)	$V_{REF} + 5$	Add 10%

NOTE Due to the stall pusher being inoperative, the minimum approach speed and landing distance factor are defined in the table.

<table>
<tr><th colspan="2">The following equipment will be INOPERATIVE
with Avionics Computer 1 failure</th></tr>
<tr><th colspan="2">COMMUNICATION</th></tr>
<tr><td>COM 1 tuning (defaults to 121.5)
GPS 1</td><td>NAV 1
Transponder 1 (only for dual installations)</td></tr>
<tr><th colspan="2">NAVIGATION/AFCS</th></tr>
<tr><td>AHRS 1 and 2 (degraded)
TAWS (degraded)
Stall Pusher</td><td>CSC
Radio Altimeter
TCAS</td></tr>
<tr><th colspan="2">ENGINE</th></tr>
<tr><td>L Fire Suppression CAS</td><td></td></tr>
<tr><th colspan="2">FLIGHT CONTROL</th></tr>
<tr><td>Flaps (Degraded)</td><td></td></tr>
</table>

— END OF PROCEDURE —

AVIONICS COMPUTER 2 FAIL

1. Radio .... COM 1
2. Navigation ....NAV 1 or GPS
3. Transponder..Verify XPDR 1
4. Do not perform intentional stalls

NOTE Stall Pusher is inoperative. Stall Warning remains operative based on available valid ADC AOA data.

NOTE Failure of Avionics Computer 2 will cause associated failures which will result in the following CAS messages:

FLAP FAULT ,
NOSEWHEEL STEER FAULT .

The procedures for those messages should be followed in addition to this procedure.

PRIOR TO LANDING

5. Final approach speed.. $V_{REF} + 5$

Flap Setting	Min Approach Speed	Landing Distance
LDG	$V_{REF} + 5$	Add 10%
TO/APPR (ice)	$V_{REF} + 5$	Add 10%

NOTE Due to the stall pusher being inoperative, the minimum approach speed and landing distance factor are defined in the table.

┌ **Procedure Continued** ┐

The following equipment will be **INOPERATIVE** with an Avionics Computer 2 failure	
COMMUNICATION	
COM 2 tuning (defaults to 121.5)	NAV 2
GPS 2	Transponder 2
NAVIGATION/AFCS	
AHRS 1 and 2 (degraded)	Stall Pusher
ILS/BC on Standby Instrument	CSC
ENGINE	
R Fire Suppression CAS	
FLIGHT CONTROL	
Flaps (Degraded)	Speedbrake Auto-retract

— END OF PROCEDURE —

CPDLC FAIL

1. Select other means of communication

— END OF PROCEDURE —

DATA ACQUISITION 1 FAIL

4

1. L FUEL PUMP .... ON
2. Icing Conditions .... Exit
3. ENGINE ANTI-ICE .... Both OFF, if practical
4. WING ANTI-ICE .... OFF
5. ITT .... Monitor

CAUTION *Engines will not sense operation of wing anti-ice or left engine anti-ice. This could result in an engine ITT exceedance if TO or MCT power is selected and the wing or engine anti-ice is on.*

6. Land at nearest suitable airport

BEFORE SHUTDOWN

7. Wheel Chocks .... Install

NOTE Failure of Data Acquisition Unit 1 will cause associated failures which will result in the following CAS messages:

L ENG CONTROL FAULT ,
R ENG CONTROL FAULT ,
WING ANTI-ICE FAULT ,
L ENG ANTI-ICE FAULT ,
L ENG BLEED FAULT ,
PITCH TRIM FAULT ,
L ENG FAULT ,
NOSEWHEEL STEER FAULT .

The procedures for those messages should be followed in addition to this procedure.

┌ **Procedure Continued** ┐

The following equipment will be INOPERATIVE with Data Acquisition Unit 1 failure	
ENGINE	
L Fuel Filter Pressure Sensing	L Oil Filter Pressure Sensing
L Chip Detector Sensing	L Oil Level
L Vibration Detection	L Oil Temperature
L and R Wing Anti-ice Sensing	
HYDRAULIC	
Volume and System Pressure (Ind.)	Emergency/Parking Brake Pressure (Ind.)
Anti-Skid Fail monitor	
FUEL	
L Fuel Pump Automatic Activation	L Fuel Pump Fail Sensing
L and R SOV Position (Ind.)	Crossfeed Valve (Ind.)
L Fuel Temperature	L Fuel Pump (Ind.)
ENVIRONMENTAL	
L Manifold Temp and Press (Ind.)	L and R CABIN INFLOW (Ind.)
L ENG Bleed (Ind.)	L Eng Bleed Leak Detection
ICE PROTECTION	
L Eng Anti-ice Temp and Press (Ind.)	L Wing Anti-ice Valve (Ind.)
L WINDSHIELD Zone (Ind.)	Wing Anti-ice High Flow
Wing Bleed Leak Detection	

— END OF PROCEDURE —

DATA ACQUISITION 2 FAIL

1. R FUEL PUMP .... ON
2. Icing Conditions .... Exit
3. ENGINE ANTI-ICE .... Both OFF, if practical
4. WING ANTI-ICE .... OFF
5. ITT .... Monitor

CAUTION *Engines will not sense operation of wing anti-ice or right engine anti-ice. This could result in an engine ITT exceedance if TO or MCT power is selected and the wing or engine anti-ice is on.*

6. Land at nearest suitable airport

BEFORE SHUTDOWN

7. Wheel Chocks .... Install

NOTE Failure of Data Acquisition Unit 2 will cause associated failures which will result in the following CAS messages:

R ENG CONTROL FAULT ,
WING ANTI-ICE FAULT ,
R ENG ANTI-ICE FAULT ,
R ENG BLEED FAULT ,
L CABIN BLEED FAULT ,
PITCH TRIM FAULT ,
R ENG FAULT ,
NOSEWHEEL STEER FAULT .

The procedures for those messages should be followed in addition to this procedure.

┌ **Procedure Continued** ┐

The following equipment will be INOPERATIVE with Data Acquisition Unit 2 failure

ENGINE

R Fuel Filter Pressure Sensing
R Chip Detector Sensing
R Vibration Detection
L and R Wing Anti-ice Sensing
R Oil Filter Pressure Sensing
R Oil Level
R Oil Temperature

ELECTRICAL

R Generator Voltage or Current (Ind.)

HYDRAULIC

Anti-Skid Fail Monitor
Hydraulic Pump (Ind.)
Parking/Emer Brake Position Sensing
Main Accumulator Pressure (Ind.)

FUEL

R Fuel Pump Automatic Activation
L and R SOV Closed Position (Ind.)
R Fuel Pump Fail Sensing
Crossfeed Valve Closed (Ind.)

ENVIRONMENTAL

R Manifold Temp and Press (Ind.)
R Eng Bleed Leak Detection
L and R ENG Bleed (Ind.)
L and R HPRSOV (Ind.)

ICE PROTECTION

R Eng Anti-ice Temp and Press (Ind.)
R WINDSHIELD Zone (Ind.)
Wing Crossflow (Ind.)
Wing Anti-ice High Flow
Ice Detector 2
R Zone Temp (Ind.)
R Eng Anti-ice (Ind.)

— END OF PROCEDURE —

DATA ACQUISITION 3 FAIL

1. Icing Conditions .... Exit
2. WING ANTI-ICE .... OFF
3. ITT .... Monitor

6

CAUTION *Engines will not sense operation of wing anti-ice. This could result in an engine ITT exceedance if TO or MCT power is selected and the wing or engine anti-ice is on.*

4. Land at nearest suitable airport

NOTE Failure of Data Acquisition Unit 3 will cause associated failures which will result in the following CAS messages:

L CABIN BLEED FAIL ,
R ENG CONTROL FAULT ,
WING ANTI-ICE FAULT ,
R CABIN BLEED FAULT ,
R ENG FAULT ,
NOSEWHEEL STEER FAULT .

The procedures for those messages should be followed in addition to this procedure.

┌ **Procedure Continued** ┐

The following equipment will be INOPERATIVE **with Data Acquisition Unit 3 failure**	
ENGINE	
L and R Fire Extinguisher Status	
HYDRAULIC	
Normal Brake Pressure (Ind.)	Brake Accumulator Pressure (Ind.)
FUEL	
L and R Fuel Pressure (Ind.) Fuel ISO Valve (Ind.)	R Fuel Temp Sensing L and R Fuel Pump Control (Latched ON)
ENVIRONMENTAL	
R Cabin Bleed Temp (Ind) L and R Eng Bleed Leak Detection	Air Conditioner Status (Ind.) Cockpit Duct Temp
DOORS	
External Power Door (Ind.)	Electrical Service Doors (Ind.)
ICE PROTECTION	
L and R Wing Anti-ice Valve (Ind.) Wing Bleed Leak Detection	L or R Wing Anti-ice Sensing and Indication

— END OF PROCEDURE —

DATA CONCENTRATOR 1 FAIL

1. Land at nearest suitable airport

CAUTION *Loss of data will suppress some subsequent failure indications including CAS alerts.*

7

CAUTION *Left engine fire warning and suppression will be unavailable except the light in the ENGINE FIRE PUSH Switch.*

NOTE Failure of Data Concentrator 1 will cause associated failures which will result in the following CAS messages:

FUEL QTY FAULT ,
L ENG CONTROL FAULT ,
STALL PUSHER FAIL ,
L GENERATOR FAULT ,
ENG SYNC FAIL ,
R ENG FAULT ,
L ENG FAULT ,
AIR DATA 1 FAULT ,
AFCS FAULT ,
NOSEWHEEL STEER FAULT .

The procedures for those messages should be followed in addition to this procedure.

NOTE If use of the oxygen mask is required, the OXYGEN MASK AUDIO switch must be selected to EMER to activate the oxygen mask microphone.

┌ **Procedure Continued** ┐

The following equipment will be INOPERATIVE with Data Concentrator Unit 1 failure	
COMMUNICATION	
Pilot Scroll Wheel Pilot O2 Mask Mic Door Switch	FDR Data to CVFDR
NAVIGATION/AFCS	
Stall Pusher ADF AHRS 1 (degraded) Weather Radar	ADC 1 Temperature Indication XM Weather and Music INMARSAT CSC
ENGINE	
L Engine Fire Warning Aural L and R FADEC Data Redundancy L Fire Extinguisher Control	L Eng Fire Warning CAS and EI flag L Engine Fire Pushbutton Engine Sync
ELECTRICAL	
No indication of #1 side information	
FUEL	
L and CTR Fuel Quantity L and R SOV Position (Ind.)	Fuel Iso Valve Position (Ind.)
ENVIRONMENTAL	
L ENG Bleed Valve (Ind.)	
LIGHTING	
Lighting Control 1 NAV Lights Beacon	Ice Inspection Light(s) L Landing Light R Taxi Light

— END OF PROCEDURE —

DATA CONCENTRATOR 2 FAIL

1. Land at nearest suitable airport

CAUTION *Loss of data will suppress some subsequent failure indications including CAS alerts.*

CAUTION *Right engine fire warning and suppression will be unavailable except the light in the ENGINE FIRE PUSH Switch.*

NOTE Failure of Data Concentrator 2 will cause associated failures which will result in the following CAS messages:

FUEL QTY FAULT ,
R ENG CONTROL FAULT ,
STALL PUSHER FAIL ,
R GENERATOR FAULT ,
ENG SYNC FAIL ,
R ENG FAULT ,
AIR DATA 2 FAULT ,
AFCS FAULT ,
NOSEWHEEL STEER FAULT .

The procedures for those messages should be followed in addition to this procedure.

NOTE If use of the oxygen mask is required, the OXYGEN MASK AUDIO switch must be selected to EMER to activate the oxygen mask microphone.

┌ **Procedure Continued** ┐

The following equipment will be INOPERATIVE with Data Concentrator Unit 2 failure	
COMMUNICATION	
Copilot Scroll Wheel Copilot O2 Mask Mic Door Switch	SATCOM/Connext™ Weather
NAVIGATION/AFCS	
Stall Pusher Weather Radar ADC 2 Temperature Indication	AHRS 2 (degraded) DME CSC
ENGINE	
R Engine Fire Warning Aural L and R FADEC Data Redundancy R Engine Fire Extinguisher Control	R Engine Fire CAS and EI flag R Engine Fire Pushbutton Engine Sync
ELECTRICAL	
No indication of #2 side information	
FUEL	
R Fuel Quantity L and R SOV Position (Ind.)	Fuel Iso Valve Position (Ind.) Crossfeed Valve Position (Ind.)
ENVIRONMENTAL	
Cabin Fan Speed (Ind.)	
LIGHTING	
Lighting Control 2 L Taxi Light R Landing Light	Strobe Lights RECOG Lights Logo Lights

— END OF PROCEDURE —

FLT DIR MODE CHANGE

1. Mode Control Panel .... Re-engage desired modes

NOTE During approach, loss or unavailability of the navigation source signal could cause a flight director mode change. In this case, the desired mode may be unavailable until the navigation signal is available.

— END OF PROCEDURE —

RUDDER BIAS FAIL

1. Maintain directional control with rudder inputs

NOTE Rudder forces with one engine inoperative will increase with Rudder Bias inoperative. Use of additional bank angle into the operable engine may be used to reduce residual forces.

— END OF PROCEDURE —

STALL PUSHER FAIL

9

1. Do not perform intentional stalls.

NOTE Stall Pusher is inoperative. Stall Warning remains operative based on available valid ADC AOA data.

PRIOR TO LANDING

2. Final approach speed.. $V_{REF} + 5$

Flap Setting	Min Approach Speed	Landing Distance
LDG	$V_{REF} + 5$	Add 10%
TO/APPR (ice)	$V_{REF} + 5$	Add 10%

NOTE Due to the stall pusher being inoperative, the minimum approach speed and landing distance factor are defined in the table.

— END OF PROCEDURE —

STALL WARN MISCOMP

1. Compare Left and Right PFD air data information
2. PFD (affected side)..............................Select operable ADC
3. RVSM airspace...Exit

— END OF PROCEDURE —

TRANSPONDER MODE

1. Select appropriate transponder mode

If TRANSPONDER MODE message remains posted

2. Transponder...............Select other transponder (if installed)

If TRANSPONDER MODE message remains posted

1. RVSM airspace...Exit

— END OF PROCEDURE —

YAW DAMPER FAIL

If the autopilot is available

1. Autopilot .... Engage

NOTE Dutch Roll damping improves at all altitudes with the autopilot engaged

If the autopilot is not available

1. Altitude.. FL 240 or lower

NOTE Dutch Roll damping improves at lower altitudes

2. Land at nearest suitable airport

— END OF PROCEDURE —

YAW DAMPER OFF

1. Yaw Damper .... Engage

— END OF PROCEDURE —

PFD/EIS/ASI FLAGS

Display Flag/Indication	Description
Air Data	
IAS	An Indicated Airspeed miscompare of greater than 6 knots has been detected between the two primary air data probes.
ALT	An Altitude miscompare of greater than 200 ft. has been detected between the two primary air data probes. The aircraft no longer meets the requirements for flight in RVSM airspace and RVSM airspace must be exited.
LSA FAIL	Low Speed Awareness is failed.
BOTH ON ADC 1	The pilot and copilot PFDs are displaying air data from the #1 air data probe. The aircraft no longer meets the requirements for flight in RVSM airspace and RVSM airspace must be exited.
BOTH ON ADC 2	The pilot and copilot PFDs are displaying air data from the #2 air data probe. The aircraft no longer meets the requirements for flight in RVSM airspace and RVSM airspace must be exited.
BOTH ON ADC STBY	The pilot and copilot PFDs are displaying air data from the standby air data probe. The aircraft no longer meets the requirements for flight in RVSM airspace and RVSM airspace must be exited.
USING ADC 1	The copilot PFD is displaying air data from the #1 air data probe.
USING ADC 2	The pilot PFD is displaying air data from the #2 air data probe.
USING ADC STBY	The pilot or copilot PFD are displaying air data from the standby air data probe. The aircraft no longer meets the requirements for flight in RVSM airspace and RVSM airspace must be exited.

┌ **Procedure Continued** ┐

PFD/EIS/ASI FLAGS (Cont)

Display Flag/Indication	Description
Air Data (continued)	
IAS	Indicates the avionics system is not able to perform the airspeed comparator function. Airspeed data is missing or invalid from one or both primary air data probes.
ALT	Indicates the avionics system is not able to perform the altitude comparator function. Altitude data is missing or invalid from one or both primary air data probes. The aircraft no longer meets the requirements for flight in RVSM airspace and RVSM airspace must be exited.
Attitude Heading Reference System (AHRS)	
BOTH ON AHRS 1	The pilot and copilot PFDs are displaying attitude and heading data from the #1 AHRS.
BOTH ON AHRS 2	The pilot and copilot PFDs are displaying attitude and heading data from the #2 AHRS.
BOTH ON AHRS STBY	The pilot and copilot PFDs are displaying attitude and heading data from the standby AHRS.
USING AHRS 1	The copilot PFD is displaying attitude and heading data from the #1 AHRS.
USING AHRS 2	The pilot PFD is displaying attitude and heading data from the #2 AHRS.
USING AHRS STBY	The pilot or copilot PFD is displaying attitude and heading data from the standby AHRS.
PIT	A Pitch miscompare of greater than 5° has been detected between the two primary AHRS.
ROL	A Roll miscompare of greater than 6° has been detected between the two primary AHRS.

┌ **Procedure Continued** ┐

Display Flag/Indication	Description
HDG	A Heading miscompare of greater than 6° has been detected between the two primary AHRS. NOTE: This flag may be observed on the ground in the vicinity of equipment or buildings.
PIT	Indicates the avionics system is not able to perform the pitch comparator function. Pitch data is missing or invalid from one or both primary AHRS.
ROL	Indicates the avionics system is not able to perform the roll comparator function. Roll data is missing or invalid from one or both primary AHRS.
HDG	Indicates the avionics system is not able to perform the heading comparator function. Heading data is missing or invalid from one or both primary AHRS.
Global Positioning System (GPS)	
BOTH ON GPS 1	GPS 2 is failed. The system is using GPS 1 for GPS position, vector, and time information.
BOTH ON GPS 2	GPS 1 is failed. The system is using GPS 2 for GPS position, vector, and time information.
DR	Dead Reckoning mode is active. The system is using non-navigation source information (heading, airspeed, etc.) to estimate aircraft position from last known navigation source position.
GPS LOI	GPS Loss of Integrity (LOI). This display flag indicates loss of GPS integrity monitoring functions or the integrity is insufficient for the current phase of flight. This flag is also displayed when both GPS units are failed. During this condition FMS course deviation data is removed from the PFD.
UNABLE RNP	The system is unable to achieve the required accuracy.

┌ **Procedure Continued** ┐

Display Flag/Indication	Description
Radio Altimeter	
RA FAIL	The Radio Altimeter has failed.
SurfaceWatch	
CHECK RUNWAY	The aircraft is aligned with a runway that is not entered in the avionics, as detected by the SurfaceWatch. This is accompanied by the "Check Runway" aural alert. Refer to the *Cockpit Reference Guide* for details.
Terrain Awareness and Warning System	
TERRAIN	Terrain Caution, accompanied by the appropriate aural and CDU pop-up alert, as determined by the TAWS. Refer to the *Cockpit Reference Guide* for details.
TAWS FAIL	The TAWS function has failed. All or portions of the TAWS function are not available. Refer to the *Cockpit Reference Guide* for details. This alert is accompanied by a "TAWS System Failure" aural alert.
GPWS FAIL	The GPWS function has failed. All or portions of the GPWS function are not available. Refer to the *Cockpit Reference Guide* for details. This alert is accompanied by a "GPWS System Failure" aural alert. This alert is only displayed in TAWS-A configurations.
TAWS N/A	Portions of the TAWS function are not available, depending on the failure cause. Refer to the *Cockpit Reference Guide* for details.
GLIDESLOPE	An excessive glideslope deviation has been detected by the TAWS. This alert is only displayed in TAWS-A configurations.
GLIDEPATH	An excessive glide path deviation has been detected by the TAWS. This alert is only displayed in TAWS-A configurations.

┌ **Procedure Continued** ┐

Display Flag/Indication	Description
Traffic Collision and Avoidance System (TCAS)	
TRAFFIC	Traffic Advisory (TA) is active. A potentially hazardous intruding aircraft has been detected and is closing to within 20-48 seconds of a potential collision area. In TCAS I installations, this visual alert is accompanied by an aural alert indicating the presence of traffic and relative bearing/altitude ("Traffic! 11 o'clock, high, six miles!"). In TCAS II installations, this visual alert is accompanied by a "Traffic! Traffic!" aural alert.
TCAS FAIL	The TCAS has failed.
TCAS STBY	The TCAS is in Standby mode during flight.
TA ONLY	TA mode has been selected by the flight crew or automatically engaged during takeoff or landing. During this mode, Resolution Advisories are inhibited. This selection is only available in TCAS II installations.
TCAS STBY	Standby mode has been selected by the flight crew while the aircraft is on ground. In flight the annunciation is amber. During this mode, all TCAS alerting functions are unavailable.
Windshear	
WINDSHEAR	Windshear Caution indicating increasing performance windshear. This alert is accompanied by a repeating "Caution Windshear" aural alert.

DOORS

AFT BAG DOOR UNSAFE

ON GROUND

1. Aft Baggage Door .... Close

— END OF PROCEDURE —

DURING FLIGHT

1. Airspeed .... Reduce
2. Land at nearest suitable airport

— END OF PROCEDURE —

CABIN DOOR UNSAFE

11

ON GROUND

1. Main Cabin Door .... Close

— END OF PROCEDURE —

DURING FLIGHT

1. Seatbelts .... Verify fastened
2. CABIN SIGNS
    a. Fasten Seatbelts.. On
3. Airspeed .... Reduce
4. Descend to 10,000 ft MSL or Minimum Safe Altitude, whichever is higher
5. Land at nearest suitable airport

— END OF PROCEDURE —

EMER EXIT DOOR UNSAFE

ON GROUND

1. Emergency Exit Door.................... Verify properly installed

— END OF PROCEDURE —

DURING FLIGHT

1. Emergency Exit Door Handle .... Verify closed

If EMER EXIT DOOR UNSAFE message remains

2. Continue planned flight

NOTE The emergency exit door is a plug type door.

— END OF PROCEDURE —

EXT PWR DOOR UNSAFE

ON GROUND

1. Do not taxi
2. External power cord ....Verify removed
3. External power door .... Close

— END OF PROCEDURE —

DURING FLIGHT

1. Continue planned flight

NOTE The external power door will remain closed due to airflow during flight.

— END OF PROCEDURE —

FWD BAG DOOR UNSAFE

ON GROUND

1. Fwd Baggage Door .... Close

— END OF PROCEDURE —

DURING FLIGHT

1. Airspeed .... Reduce
2. Land at nearest suitable airport

— END OF PROCEDURE —

THIS PAGE INTENTIONALLY LEFT BLANK

ELECTRICAL SYSTEMS

BATTERY BUS 1 FAIL

1. PITCH TRIM MODE.. STBY
2. Thrust Levers .... Avoid rapid movements
3. Icing Conditions..Exit
4. Left DISPLAY REVERSION .... REV
5. Radio .... COM 2

CAUTION *Pilot will not hear intercom or alerts through headset, but alerts will be automatically routed to cross-side speaker. Speaker volume may need to be adjusted to ensure alerts can be heard while wearing headset.*

NOTE The pilot's handheld microphone and speaker are inoperative.

NOTE The pilot's boom mic, or oxygen mask mic is automatically routed to COM 2 for communication with ATC.

NOTE Marker beacon functionality (aural and visual) will be inoperative on the failed side.

6. Navigation ....NAV 2 or GPS

NOTE COM 2, NAV 2, and GPS are the only communication and navigation sources available during a Battery Bus 1 failure.

┌ **Procedure Continued** ┐

7. Transponder..............XPDR 2 (if applicable) or notify ATC
8. L ENGINE BLEED..OFF
9. WING FLOW.. FROM R
10. L WINDSHIELD HEAT ....OFF
11. Altitude...................................Descend to FL 250 or below
12. NOSE WHEEL STEERING ....OFF
13. Select a long, wide, and dry runway with minimal crosswind

WARNING **Anti-skid is not functional. Any braking above light in wet runway conditions could result in blown tires and loss of directional control.**

NOTE Landing distance will double on a wet runway using light braking.

CAUTION *Nosewheel steering is inoperative. Crosswinds should be minimized to ensure adequate directional control during the low-speed portion of the rollout using differential braking.*

14. Land at nearest suitable airport

CAUTION *Loss of data will suppress some subsequent failure indications including CAS alerts.*

NOTE Stall Pusher is inoperative. Low Speed Awareness remains operative in a degraded mode based on available valid ADC AOA data.

┌ **Procedure Continued** ┐

BATTERY BUS 1 FAIL (Cont)

DESCENT

1. Landing Field Elevation .... Verify set
2. Altimeters (transition altitude) .... Set

APPROACH

1. Seats and Seat Belts .... Adjusted and secure
2. Passenger Briefing .... Complete
3. Avionics .... Set
4. Landing Data .... Set and confirmed
    a. Radios and Navigation .... Set
    b. V-speeds, FMS, and Flight Guidance .... Set, programmed, and modes selected
    c. Landing Distance .... Confirm

Flap Setting	Min Approach Speed	Landing Distance
UP	$V_{REF} + 20$	Add 105%
TO/APPR	$V_{REF} + 10$	Add 75%
LDG	$V_{REF} + 5$	Add 60%

NOTE Flaps are inoperative during a Battery Bus 1 failure. The flap setting at the time the failure occurred will be the final flap setting.

NOTE Due to anti-skid and the stall pusher being inoperative, the minimum approach speed and landing distance factor are defined in the table.

NOTE Landing distance will double on a wet runway using light braking.

┌ **Procedure Continued** ┐

5. CAS Messages ....Check
6. Approach Briefing..Complete

BEFORE LANDING

1. Landing Gear....................................... Alternate Extension
    a. LDG GEAR CTRL circuit breaker...............PULL (B7)
    b. LANDING GEAR .... DN
    c. Airspeed....................................... 150 KIAS minimum
    d. ALTERNATE GEAR RELEASE handle......... Pull fully
    e. Yaw airplane, if necessary, to obtain gear locked down
    f. LANDING GEAR indicator........Verify three green DN

NOTE The gear DOOR icon will remain posted but a normal landing is possible without gear door - ground contact.

    g. ALTERNATE GEAR RELEASE handle................ Stow

CAUTION *The ALTERNATE GEAR RELEASE handle could interfere with thrust lever operation if not stowed following use.*

NOTE Normal landing gear operations cannot be restored in flight after activation of the alternate gear release.

2. Airspeed ....(Flaps UP) – V_{REF} + 20
(Flaps TO/APPR) – V_{REF} + 10
(Flaps LDG) – V_{REF} + 5
3. Yaw Damper .... Disengage

┌ **Procedure Continued** ┐

BATTERY BUS 1 FAIL (Cont)

LANDING

1. Thrust Levers .... IDLE

CAUTION *Brakes must be applied gradually. Light to moderate braking can be applied without skidding tires on a dry surface, however, the pilot should consider runway surface conditions when applying brakes.*

2. Brakes.. Apply Gradually
3. Maintain directional control with rudder and differential braking

FOLLOWING LANDING ROLLOUT

CAUTION *Following landing rollout, the emergency and brake accumulators may drop below the level required for braking.*

1. Do not taxi
2. Wheel chocks .... Install

┌ **Procedure Continued** ┐

The following equipment will be INOPERATIVE with a Battery Bus 1 failure	
COMMUNICATION	
COM 1 Transponder 1	L Audio
NAVIGATION/AFCS	
Autopilot AHRS 1 and ADC 1 Standby Instrument Standby AHRS and ADC ADF TCAS Radio Altimeter	L PFD SiriusXM® Weather Datalink NAV 1 L CDU Weather Radar SATCOM/Connext™ Weather GPWS
ENGINE	
L Engine Instruments L Fire Extinguisher	L Fire Detection
FLIGHT CONTROL	
Normal Pitch Trim Roll and Yaw Trim Stall Pusher	Stall Warning Flaps Speedbrake
LANDING GEAR AND BRAKES	
Landing Gear Control Hydraulic Pump	Anti-Skid Hydraulic Pump
FUEL	
L Fuel Pump Left Fuel Quantity Center Fuel Quantity	L Fuel Pump Left Fuel Quantity Center Fuel Quantity
ENVIRONMENTAL	
L ENG Bleed (Ind.) Cockpit Fan	Left Eng Bleed Leak Detection
ICE PROTECTION	
Ice Detector 1 Standby Probe Heat L Probe Heat	L Engine Anti-ice (failed on) L Wing Anti-ice L Windshield Zone Heat
LIGHTING	
Cockpit Flood Light L Landing Light Ice Inspection Light(s) Strobe Light Footwell Lights	Cabin Signs Beacon Position Lights R Taxi Light

— END OF PROCEDURE —

BATTERY BUS 1A FAIL

1. Solid State Relay (SSR) .... Reset if necessary

If BATTERY BUS 1A FAIL message remains

2. Thrust Levers .... Avoid rapid movements

CAUTION *When operating on a single engine bleed with wing anti-ice ON above FL 340, large or sudden thrust changes may result in an ITT exceedance.*

NOTE The **L(R) ENG CONTROL FAULT** message may post if wing anti-ice is active until WING FLOW is selected from the operable side.

3. Icing Conditions...Exit
4. Left DISPLAY REVERSION .... REV
5. Radio .... COM 2

CAUTION *Pilot will not hear intercom or alerts through headset, but alerts will be automatically routed to cross-side speaker. Speaker volume may need to be adjusted to ensure alerts can be heard while wearing headset.*

NOTE The pilot's handheld microphone and speaker are inoperative.

NOTE The pilot's boom mic, or oxygen mask mic is automatically routed to COM 2 for communication with ATC.

NOTE Marker beacon functionality (aural and visual) will be inoperative on the failed side.

┌ **Procedure Continued** ┐

6. Navigation ....NAV 2 or GPS

NOTE COM 2, NAV 2, and GPS are the only communication and navigation sources available during a Battery Bus 1A failure.

7. Transponder..............XPDR 2 (if applicable) or notify ATC
8. L ENGINE BLEED...OFF
9. WING FLOW .... FROM R
10. Altitude...................................Descend to FL 250 or below
11. Land at nearest suitable airport

CAUTION *Loss of data will suppress some subsequent failure indications including CAS alerts.*

DESCENT

1. Landing Field Elevation ....Verify set
2. ENGINE ANTI-ICE.. As required
3. Altimeters (transition altitude) .... Set

APPROACH

1. Seats and Seat Belts ....Adjusted and secure
2. Passenger Briefing...Complete
3. CABIN SIGNS... As required
4. Avionics.. Set
5. Landing Data...Set and confirmed
    a. Radios and Navigation... Set
    b. V-speeds, FMS, and Flight Guidance ....Set, programmed, and modes selected
    c. Landing Distance..Confirm

Flap Setting	Min Approach Speed	Landing Distance
LDG	$V_{REF} + 5$	Add 10%

┌ **Procedure Continued** ┐

BATTERY BUS 1A FAIL (Cont)

NOTE Due to the stall pusher being inoperative, the minimum approach speed and landing distance factor are defined in the table.

6. CAS Messages .... Check
7. Approach Briefing .... Complete
8. FLAPS .... TO/APPR

BEFORE LANDING

1. Landing Gear .... Alternate Extension
    a. LDG GEAR CTRL circuit breaker .... PULL (B7)
    b. LANDING GEAR .... DN
    c. Airspeed .... 150 KIAS minimum
    d. ALTERNATE GEAR RELEASE handle .... Pull fully
    e. Yaw airplane, if necessary, to obtain gear locked down
    f. LANDING GEAR indicator .... Verify three green DN

NOTE The gear DOOR icon will remain posted but a normal landing is possible without gear door - ground contact.

    g. ALTERNATE GEAR RELEASE handle .... Stow

CAUTION *The ALTERNATE GEAR RELEASE handle could interfere with thrust lever operation if not stowed following use.*

NOTE Normal landing gear operations cannot be restored in flight after activation of the alternate gear release.

2. FLAPS .... LDG

┌ **Procedure Continued** ┐

3. Airspeed .... V_{REF} + 5
4. Yaw Damper .... Disengage

LANDING

1. Thrust Levers .... IDLE
2. Brakes.. Apply
3. SPEEDBRAKE (if installed) .... EXT

The following equipment will be INOPERATIVE with a Battery Bus 1A failure	
COMMUNICATION	
COM 1 L Audio	Transponder 1
NAVIGATION/AFCS	
L PFD Stall Pusher Standby Instrument Standby AHRS and ADC SiriusXM® Weather Datalink TCAS Radio Altimeter	L CDU ADF NAV 1 Control Yoke System Control and Scroll Wheel Weather Radar GPWS
ENGINE	
L Fire Detection	
LANDING GEAR AND BRAKES	
Landing Gear Control	
FUEL	
Left Fuel Quantity R Fuel Pump Control (latches ON)	L Fuel Shutoff Valve
ENVIRONMENTAL	
L Bleed Leak Detection	L Engine Bleed
ICE PROTECTION	
L Wing Anti-ice	
LIGHTING	
Cockpit Flood Light L Landing Light NAV Lights Right Taxi Light	Lighting Control 1 Ice Inspection Light(s) Ground Beacon

— END OF PROCEDURE —

BATTERY BUS 1B FAIL

1. Solid State Relay (SSR) .... Reset if necessary

If BATTERY BUS 1B FAIL message remains

2. PITCH TRIM MODE.. STBY
3. Thrust Levers .... Avoid rapid movements

CAUTION *When operating on a single engine bleed with wing anti-ice ON above FL 340, large or sudden thrust changes may result in an ITT exceedance.*

NOTE The **L(R) ENG CONTROL FAULT** message may post if wing anti-ice is active until WING FLOW is selected from the operable side.

4. WING FLOW .... FROM R
5. Icing Conditions ....Exit
6. Left PFD....................................... Verify AHRS 2 selected
7. RVSM airspace...Exit
8. NOSE WHEEL STEERING ....OFF
9. Select a long, wide, and dry runway with minimal crosswind

WARNING **Anti-skid function is not available. Any braking above light in wet runway conditions could result in blown tires and loss of directional control.**

15

CAUTION *Nosewheel steering is inoperative. Crosswinds should be minimized to ensure adequate directional control during the low-speed portion of the rollout using differential braking.*

┌ **Procedure Continued** ┐

NOTE Landing distance will double on a wet runway using light braking.

10. Land at nearest suitable airport.

NOTE Stall Pusher is inoperative. Low Speed Awareness remains operative in a degraded mode based on available valid ADC AOA data.

DESCENT

1. Landing Field Elevation .... Verify set
2. Altimeters (transition altitude) .... Set

APPROACH

1. Seats and Seat Belts .... Adjusted and secure
2. Passenger Briefing..Complete
3. CABIN SIGNS.. As required
4. Avionics... Set
5. Landing Data.. Set and confirmed
   a. Radios and Navigation... Set
   b. V-speeds, FMS, and Flight Guidance .... Set, programmed, and modes selected
   c. Landing Distance ....Confirm

Flap Setting	Min Approach Speed	Landing Distance
UP	V_{REF} + 20	Add 105%
TO/APPR	V_{REF} + 10	Add 75%
LDG	V_{REF} + 5	Add 60%

NOTE Flaps are inoperative during a Battery Bus 1B failure. The flap setting at the time the failure occurred will be the final flap setting.

Procedure Continued

BATTERY BUS 1B FAIL (Cont)

NOTE Due to anti-skid and the stall pusher being inoperative, the minimum approach speed and landing distance factor are defined in the table.

NOTE Landing distance will double on a wet runway using light braking.

6. CAS Messages .... Check
7. Approach Briefing .... Complete

BEFORE LANDING

1. Landing Gear .... DN
2. Airspeed .... (Flaps UP) – $V_{REF} + 20$
   (Flaps TO/APPR) – $V_{REF} + 10$
   (Flaps LDG) – $V_{REF} + 5$
3. Yaw Damper .... Disengage

LANDING

1. Thrust Levers .... IDLE

CAUTION *Brakes must be applied gradually. Light to moderate braking can be applied without skidding tires on a dry surface, however, the pilot should consider runway surface conditions when applying brakes.*

2. Brakes .... Apply Gradually
3. Use rudder and differential braking to maintain direction control
4. SPEEDBRAKE (if installed) .... EXT

┌ **Procedure Continued** ┐

FOLLOWING LANDING ROLLOUT

1. Taxi to parking using differential braking

The following equipment will be INOPERATIVE with a Battery Bus 1B failure	
NAVIGATION/AFCS	
AHRS 1 Stall Pusher TCAS RA Mode	AFCS Panel Yaw Damper (once disengaged) Flight Director
ENGINE	
L Fire Extinguisher	
FLIGHT CONTROL	
Pitch (normal), Roll and Yaw Trim	Flaps
LANDING GEAR AND BRAKES	
Anti-Skid	Nosewheel Steering
ICE PROTECTION	
Ice Detector 1 Standby Probe Heat	L Engine Anti-ice (failed on)
LIGHTING	
L Landing Light	

— END OF PROCEDURE —

BATTERY BUS 1C FAIL

1. Solid State Relay (SSR) .... Reset if necessary

If BATTERY BUS 1C FAIL message remains

2. RVSM airspace..Exit
3. Do not perform intentional stalls

NOTE Stall Pusher is inoperative. Stall Warning remains operative based on remaining ADC AOA data.

4. L PFD .... Verify ADC 2 selected

PRIOR TO LANDING

5. Final approach speed... $V_{REF} + 5$

Flap Setting	Min Approach Speed	Landing Distance
LDG	$V_{REF} + 5$	Add 10%
TO/APPR (ice)	$V_{REF} + 5$	Add 10%

NOTE Due to the stall pusher being inoperative, the minimum approach speed and landing distance factor are defined in the table.

<table>
<tr><th colspan="2">The following equipment will be INOPERATIVE
with a Battery Bus 1C failure</th></tr>
<tr><th colspan="2">NAVIGATION/AFCS</th></tr>
<tr><td>ADC 1
Stall Pusher</td><td>SiriusXM® Weather Datalink</td></tr>
<tr><th colspan="2">ENVIRONMENTAL</th></tr>
<tr><td>Cockpit Fan</td><td></td></tr>
<tr><th colspan="2">LIGHTING</th></tr>
<tr><td>Beacon</td><td></td></tr>
</table>

— END OF PROCEDURE —

BATTERY BUS 2 FAIL

1. Thrust Levers .... Avoid rapid movements

CAUTION *When operating on a single engine bleed with wing anti-ice ON above FL 340, large or sudden thrust changes may result in an ITT exceedance.*

NOTE The **L(R) ENG CONTROL FAULT** message may post if wing anti-ice is active until WING FLOW is selected from the operable side.

2. Icing Conditions ....Exit
3. Radio .... COM 1

NOTE Copilot will lose all communication capability.

4. Navigation ....NAV 1 or GPS

NOTE COM 1, NAV 1, and GPS are the only communication and navigations sources available following a Battery Bus 2 failure.

5. PRESSURIZATION CONTROL MODE .... HOLD
6. R ENGINE BLEED .... OFF
7. WING FLOW ....FROM L
8. Altitude...................................Descend to FL 250 or below
9. Land at nearest suitable airport

CAUTION *Loss of data will suppress some subsequent failure indications including CAS alerts.*

┌ **Procedure Continued** ┐

BATTERY BUS 2 FAIL (Cont)

DESCENT

1. Landing Field Elevation .... Verify set
2. Altimeters (transition altitude) .... Set

APPROACH

1. Seats and Seat Belts .... Adjusted and secure
2. Passenger Briefing .... Complete
3. CABIN SIGNS .... As required
4. Avionics .... Set
5. Landing Data .... Set and confirmed
    - a. Radios and Navigation .... Set
    - b. V-speeds, FMS, and Flight Guidance .... Set, programmed, and modes selected
    - c. Landing Distance .... Confirm

Flap Setting	Min Approach Speed	Landing Distance
LDG	V_{REF} + 5	Add 10%

NOTE Due to the stall pusher being inoperative, the minimum approach speed and landing distance factors are defined in the table.

6. CAS Messages .... Check
7. Approach Briefing .... Complete
8. FLAPS .... TO/APPR

Procedure Continued

BEFORE LANDING

1. LANDING GEAR.. DN

NOTE Hydraulic pressure indications will be unavailable with a loss of Battery Bus 2, but the hydraulic pump will be operable.

2. Cabin Differential Pressure ....Verify less than 0.3 psi

WARNING **The airplane must be unpressurized prior to landing.**

3. CABIN DUMP.................................... DUMP (if required)
4. FLAPS...LDG
5. Airspeed .... V_{REF} + 5
6. Yaw Damper .... Disengage

LANDING

1. Thrust Levers .... IDLE
2. Brakes..Apply (after touchdown)

┌ Procedure Continued ┐

BATTERY BUS 2 FAIL (Cont)

The following equipment will be INOPERATIVE with a Battery Bus 2 failure	
COMMUNICATION	
CPDLC R Audio	COM 2
NAVIGATION/AFCS	
MFD NAV 2 DME	Stall Pusher Weather Radar
ENGINE	
Right Engine Instruments R Fire Extinguisher	R Fire Detection Vibration Detection
FLIGHT CONTROL	
Standby Pitch Trim	Speedbrake
LANDING GEAR AND BRAKES	
Hydraulic (indication)	
FUEL	
R Fuel Low R Fuel Quantity R Fuel Pump	Fuel Crossfeed R Fuel Shutoff Valve
ENVIRONMENTAL	
Air Conditioner R Engine Bleed Pressure Control (normal)	R Bleed Leak Cabin Oxygen Automatic Deployment Cabin Fan
ICE PROTECTION	
R Wing Anti-ice	R Engine Anti-ice (failed on)
LIGHTING	
Ice Inspection Light Lighting Control 2 RECOG Lights Logo Lights	Strobe Lights L Taxi Light Right Landing Lights

— END OF PROCEDURE —

THIS PAGE INTENTIONALLY LEFT BLANK

BATTERY BUS 2A FAIL

1. Solid State Relay (SSR) .... Reset if necessary

If BATTERY BUS 2A FAIL message remains

2. Thrust Levers .... Avoid rapid movements

CAUTION *When operating on a single engine bleed with wing anti-ice ON above FL 340, large or sudden thrust changes may result in an ITT exceedance.*

NOTE The **L(R) ENG CONTROL FAULT** message may post if wing anti-ice is active until WING FLOW is selected from the operable side.

3. Icing Conditions .... Exit
4. Radio .... COM 1
5. Navigation .... NAV 1 or GPS

NOTE COM 1, NAV 1, and GPS are the only communication and navigations sources available following a Battery Bus 2A failure.

6. Transponder .... Verify XPDR 1
7. R ENGINE BLEED .... OFF
8. WING FLOW .... FROM L
9. Altitude .... Descend to FL 250 or below
10. Land at nearest suitable airport

NOTE Stall Pusher is inoperative. Stall Warning remains operative based on remaining ADC AOA data.

┌ **Procedure Continued** ┐

DESCENT

1. Landing Field Elevation .... Verify set
2. Altimeters (transition altitude) .... Set

APPROACH

1. Seats and Seat Belts .... Adjusted and secure
2. Passenger Briefing .... Complete
3. CABIN SIGNS .... As required
4. Avionics .... Set
5. Landing Data .... Set and confirmed
    a. Radios and Navigation .... Set
    b. V-speeds, FMS, and Flight Guidance .... Set, programmed, and modes selected
    c. Landing Distance .... Confirm

Flap Setting	Min Approach Speed	Landing Distance
LDG	V_{REF} + 5	Add 10%

NOTE Due to the stall pusher being inoperative, the minimum approach speed and landing distance factor are defined in the table.

6. CAS Messages .... Check
7. Approach Briefing .... Complete
8. FLAPS .... TO/APPR

BEFORE LANDING

1. LANDING GEAR .... DN
2. FLAPS .... LDG
3. Airspeed .... V_{REF} + 5
4. Yaw Damper .... Disengage

┌ **Procedure Continued** ┐

BATTERY BUS 2A FAIL (Cont)

LANDING

1. Thrust Levers .... IDLE
2. Brakes...Apply (after touchdown)
3. SPEEDBRAKE (if installed) .... EXT

The following equipment will be INOPERATIVE with a Battery Bus 2A failure	
NAVIGATION/AFCS	
Stall Pusher NAV 2 Transponder 2	COM 2 GPS 2
ENGINE	
Right Engine Instruments	R Fire Detection
FUEL	
R Fuel Low R Fuel Quantity	Fuel Crossfeed
ENVIRONMENTAL	
R Engine Bleed	R Bleed Leak
ICE PROTECTION	
R Wing Anti-ice	

— END OF PROCEDURE —

THIS PAGE INTENTIONALLY LEFT BLANK

BATTERY BUS 2B FAIL

1. Solid State Relay (SSR) .... Reset if necessary

If BATTERY BUS 2B FAIL message remains

2. Thrust Levers .... Avoid rapid movements

CAUTION *When operating on a single engine bleed with wing anti-ice ON above FL 340, large or sudden thrust changes may result in an ITT exceedance.*

NOTE The **L(R) ENG CONTROL FAULT** message may post if wing anti-ice is active until WING FLOW is selected from the operable side.

3. Icing Conditions..Exit
4. WING FLOW..FROM L
5. Left DISPLAY REVERSION .... REV
6. Headset (right side) .... Don
7. Speaker Volume (left side) ....Adjust

CAUTION *Copilot will not hear intercom or alerts through headset, but alerts will be automatically routed to cross-side speaker. Speaker volume may need to be adjusted to ensure alerts can be heard while wearing headset.*

NOTE The handheld microphone, speaker and oxygen mask mic on the right side are inoperative.

NOTE The audio system on the right side will default to use of the onside radio only at a fixed volume.

┌ **Procedure Continued** ┐

8. Transponder..Verify XPDR 1
9. Land at nearest suitable airport

CAUTION *Loss of data will suppress some subsequent failure indications including CAS alerts.*

NOTE Stall Pusher is inoperative. Stall Warning remains operative based on remaining ADC AOA data.

DESCENT

1. Altimeters (transition altitude) .... Set

APPROACH

1. Seats and Seat Belts ....Adjusted and secure
2. Passenger Briefing...Complete
3. CABIN SIGNS.. As required
4. Avionics.. Set
5. Landing Data.. Set and confirmed
    a. Radios and Navigation... Set
    b. V-speeds, FMS, and Flight Guidance .... Set, programmed, and modes selected
    c. Landing Distance..Confirm

Flap Setting	Min Approach Speed	Landing Distance
LDG	$V_{REF} + 5$	Add 10%
TO/APPR (ice)	$V_{REF} + 5$	Add 10%

NOTE Due to the stall pusher being inoperative, the minimum approach speed and landing distance factors are defined in the table.

6. CAS Messages ....Check

┌ **Procedure Continued** ┐

BATTERY BUS 2B FAIL (Cont)

7. Approach Briefing....................Complete
8. FLAPS....................TO/APPR

BEFORE LANDING

1. LANDING GEAR....................DN

NOTE Hydraulic pressure indications will be unavailable with a failure of Battery Bus 2B, but the hydraulic pump will be operable.

CAUTION *Do not extend the flaps to LDG unless the airframe can be confirmed free of ice and icing conditions are not expected during approach and landing.*

2. FLAPS....................LDG or TO/APPR (ice)

NOTE If TAWS-A is installed, the TAWS Warnings will annunciate when landing with Flaps at TO/APPR, unless Flap Override is selected.

3. Airspeed.................... $V_{REF} + 5$
4. Yaw Damper....................Disengage

LANDING

1. Thrust Levers....................IDLE
2. Brakes....................Apply (after touchdown)

┌ **Procedure Continued** ┐

The following equipment will be INOPERATIVE with a Battery Bus 2B failure	
COMMUNICATION	
CPDLC	R Audio Functions
NAVIGATION/AFCS	
MFD	DME
Weather Radar	TCAS RA Mode
Stall Pusher	GPS 2
Transponder 2	
ENGINE	
R Fire Extinguisher	
FLIGHT CONTROL	
Speedbrake	STBY Pitch Trim
LANDING GEAR AND BRAKES	
Hydraulic Press (indication)	
ENVIRONMENTAL	
Cabin Oxygen Automatic Deployment	
ICE PROTECTION	
R Engine Anti-ice (failed on)	
LIGHTING	
Ice Inspection Light	Strobe Lights
Lighting Control 2	L Taxi Light
RECOG Light	R Landing Light
Logo Lights	

— END OF PROCEDURE —

BATTERY BUS 2C FAIL

1. Solid State Relay (SSR) .... Reset if necessary

If BATTERY BUS 2C FAIL message remains

2. PRESSURIZATION CONTROL MODE .... HOLD

PRIOR TO LANDING

3. Cabin Differential Pressure ....Verify less than 0.3 psi
4. CABIN DUMP.................................... DUMP (if required)

WARNING **The airplane must be unpressurized prior to landing.**

The following equipment will be INOPERATIVE with a Battery Bus 2C failure	
COMMUNICATION	
SATCOM/Connext™ Weather	TCAS RA Mode
ENVIRONMENTAL	
Pressure Control (normal)	Cabin Fan

— END OF PROCEDURE —

BUS TIE FAIL

ON THE GROUND

1. Do not dispatch

— END OF PROCEDURE —

L(R) GENERATOR FAIL

NOTE During ground operations, N_2 may need to be increased above 55% on the associated engine prior to cycling the generator switch to reset the generator.

1. GENERATOR (affected side)..................OFF, then NORM

If GENERATOR FAIL message remains posted

2. BUS TIE .... Verify Norm
3. GENERATOR (affected side).......................................OFF
4. Icing Conditions ....Exit

NOTE The left zone heating of both windshields is inoperative during single generator operations.

NOTE The air conditioning compressor is inoperative during single generator operations in the air.

5. Generator amps .... Monitor

— END OF PROCEDURE —

L(R) GENERATOR OVERLOAD

1. Generator load .... Reduce

NOTE The GCU will automatically trip offline due to an overcurrent. The trip point varies based on the amount of overcurrent and duration. A GCU trip is imminent anytime the **GENERATOR OVERLOAD** is posted.

— END OF PROCEDURE —

MAIN BUS 1 FAIL

1. Icing Conditions .... Exit
2. L WINDSHIELD HEAT .... OFF
3. Do not perform intentional stalls

NOTE Stall Pusher is inoperative. Stall Warning remains operative based on remaining ADC AOA data.

4. L PFD .... Ensure ADC 2 selected
5. RVSM airspace .... Exit
6. Land at nearest suitable airport

PRIOR TO LANDING

7. Final approach speed .... $V_{REF} + 5$

Flap Setting	Min Approach Speed	Landing Distance
LDG	$V_{REF} + 5$	Add 10%

NOTE Due to the stall pusher being inoperative, the minimum approach speed and landing distance factors are defined in the table.

The following equipment will be INOPERATIVE with a Main Bus 1 failure	
NAVIGATION/AFCS	
Stall Pusher TCAS	Weather Radar Autopilot
ICE PROTECTION	
L Windshield Heat Zone	L Probe Heat

— END OF PROCEDURE —

MAIN BUS 2 FAIL

1. Icing Conditions .... Exit
2. Radio .... COM 1
3. R WINDSHIELD HEAT .... OFF
4. Transponder .... Verify XPDR 1
5. Do not perform intentional stalls

NOTE Stall Pusher is inoperative. Stall Warning remains operative based on remaining ADC AOA data.

6. RVSM airspace .... Exit
7. Land at nearest suitable airport

PRIOR TO LANDING

1. Final approach speed .... V_{REF} + 5

Flap Setting	Min Approach Speed	Landing Distance
LDG	V_{REF} + 5	Add 10%

NOTE Due to the stall pusher being inoperative, the minimum approach speed and landing distance factors are defined in the table.

┌ **Procedure Continued** ┐

The following equipment will be INOPERATIVE
with a Main Bus 2 failure

COMMUNICATION

COM 2

NAVIGATION/AFCS

R PFD
Stall Pusher
CVFDR
DME
TCAS II
R CDU
AHRS 2 and ADC 2
ADF
Transponder 2
Radio Altimeter
GPWS

ICE PROTECTION

R Windshield Heat Zone
Ice Detector 2
Right Probe Heat

LIGHTING

Strobe Lights
Cockpit Map Lights
Copilot Footwell Light
Lighting Control 1
Taxi Lights
R Landing Light
RECOG Lights
NAV Lights

— END OF PROCEDURE —

ENGINES

ENGINE AIRSTART

CAUTION *Do not attempt to restart an engine that has been shut down due to an engine fire or indicates obvious mechanical failures.*

CAUTION *Ensure positive core rotation before attempting a relight. Positive N_2 or oil pressure >1 psi can be used to determine core rotation. If there is no indication of positive N_2 or oil pressure, the starter may be engaged as long as N_2 rotation is verified prior to moving the Thrust Lever out of CUT OFF.*

PRE-START

1. Thrust Lever (affected engine) .... CUT OFF
2. ENGINE ANTI-ICE (affected engine) .... OFF
3. Airspeed and Altitude............................ Check within limits

┌ **Procedure Continued** ┐

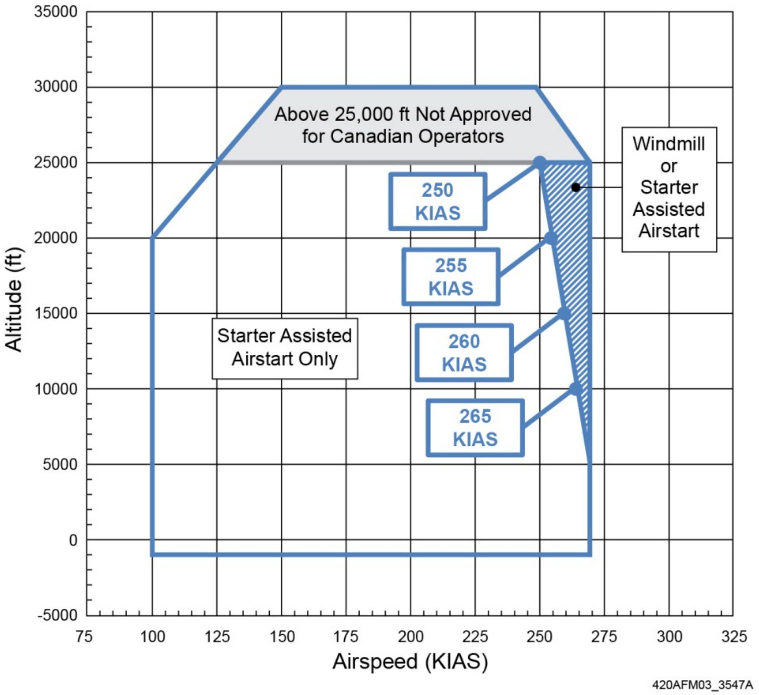

Airstart Envelope

┌ **Procedure Continued** ┐

ENGINE AIRSTART (Cont)

STARTER ASSISTED AIRSTART

NOTE The FADEC will not automatically abort an in-flight engine start. The pilot should abort the start if any of the following indications are observed:

- No ITT rise in 30 seconds
- No positive oil pressure indication within 10 seconds after N_2 increase
- Failure of N_1 or N_2 to accelerate to idle
- ITT approaching limit

Reference ENGINE START ABORT (Tab 24 – Abnormal Procedures) as appropriate.

1. Engine START Switch (affected engine) ....Press
2. Thrust Lever (affected engine) .... IDLE
3. Engine Instruments ....Monitor

┌ **Procedure Continued** ┐

WINDMILLING AIRSTART

NOTE The FADEC will not automatically abort an in-flight engine start. The pilot should abort the start if any of the following indications are observed:

- No ITT rise in 30 seconds
- No positive oil pressure indication within 10 seconds after N_2 increase
- Failure of N_1 or N_2 to accelerate to idle
- ITT approaching limit

Reference ENGINE START ABORT (Tab 24 – Abnormal Procedures) as appropriate.

1. FUEL PUMP (affected engine) .... ON
2. Thrust Lever (affected engine) .... IDLE at 8% N_2 minimum
3. Engine Instruments .... Monitor

POST START

NOTE If conditions permit, allow the engine to warm up at IDLE until the oil temperature is above 10 °C prior to selecting a higher thrust setting.

1. Thrust Lever (affected engine) .... As required
2. FUEL PUMP (affected engine) .... NORM
3. ENGINE ANTI-ICE (affected engine) .... As required
4. WING FLOW .... NORM
5. TCAS .... AUTO (TCAS II only)

— END OF PROCEDURE —

ENGINE PRECAUTIONARY SHUTDOWN IN FLIGHT

CAUTION *Severe damage to the engine, and possibly the aircraft, may occur if engine operation is continued with a serious engine malfunction. A serious malfunction can be recognized by one or more of the following symptoms:*

- *Increase in engine vibration accompanied by higher than normal ITT or fuel flow*
- *Repeated or uncontrollable engine stalls*
- *Loss of thrust*
- *A shift in engine-to-engine parameters, or in the relationship of one parameter to another during steady-state operation*
- *Oil pressure increase or decrease of ±8 psid or more from the normal steady-state operating pressure, and/or an increase in oil temperature, or indications of oil filter bypass.*

NOTE If conditions permit, with no abnormal engine indications, stabilize the engine at idle thrust for 2 minutes prior to shut down.

┌ **Procedure Continued** ┐

1. Thrust Lever (affected engine) ....CUT OFF

CAUTION *To minimize the risk of rotor lock:*

- *Maintain airspeed above 140 KIAS to ensure core rotation.*
- *Following commanded or uncommanded inflight shutdown, maintain positive core rotation throughout the engine-out scenario. If core rotation has stopped, take action to achieve core rotation as soon as practical. Failure to maintain positive core rotation may preclude a successful start.*

CAUTION *When operating on a single engine bleed with wing anti-ice ON above FL 340, large or sudden thrust changes may result in an ITT exceedance.*

NOTE The **L(R) ENG CONTROL FAULT** message may post if wing anti-ice is active until WING FLOW is selected from the operable side.

2. Fuel CROSSFEED .... As required
3. WING FLOW ....FROM L(R) (operable side)
4. TCAS (TCAS II only) ....TA ONLY
5. ENGINE ANTI-ICE (affected engine) ....OFF
6. Altitude...FL 250 or below

NOTE The left zone heating of both windshields is inoperative during single generator operations.

7. Accomplish ENGINE AIRSTART (Tab 22 – Abnormal Procedures) or SINGLE-ENGINE APPROACH AND LANDING (Tab 48 – Abnormal Procedures)

— END OF PROCEDURE —

L(R) ENG START FAIL

ENGINE START ABORT

GROUND OR STARTER ASSISTED AIRSTART

1. Thrust Lever (affected engine) .... CUT OFF

NOTE For a pilot initiated start abort on the ground, the START icon and start ITT limits will remain displayed for 60 seconds after the thrust lever is selected to CUT OFF.

If ITT rise observed or ITT is above 120 °C

CAUTION *If the ENGINE START ABORT is performed after the starter is disengaged, allow N_2 to decrease below 45% before energizing the starter for motoring or a subsequent start attempt.*

2. Engine START Switch (affected engine) .... Press
3. Engine Indications............................... Verify ITT decrease
4. Engine PUSH TO DISC .... Press
5. Accomplish SHUTDOWN in the Normal Quick Reference Handbook or ENGINE PRECAUTIONARY SHUTDOWN IN FLIGHT (Tab 23 – Abnormal Procedures)

— END OF PROCEDURE —

WINDMILLING AIRSTART

1. Thrust Lever (affected engine) .... CUT OFF
2. Accomplish ENGINE PRECAUTIONARY SHUTDOWN IN FLIGHT (Tab 23 – Abnormal Procedures)

— END OF PROCEDURE —

ENGINE TAILPIPE FIRE AFTER SHUTDOWN

1. Thrust Lever (affected engine) .... Verify CUT OFF

If ITT rise observed

2. Engine START Switch (affected engine) .... Press
3. Engine Indications................................ Verify ITT decrease
4. Engine PUSH TO DISC .... Press (after 30 seconds)

— END OF PROCEDURE —

L(R) ENG CONTROL FAIL

ON GROUND

1. Thrust Lever (affected engine) .... CUT OFF
2. ENGINE FIRE PUSH Switch (affected engine) ...Lift cover and PUSH

— END OF PROCEDURE —

IN FLIGHT

1. Thrust Lever (responsive engine)...................... As required
2. Fuel CROSSFEED .... As required

WHEN AIRCRAFT IS IN A POSITION TO LAND

3. Thrust Lever (affected engine) .... CUT OFF
4. ENGINE FIRE PUSH Switch (affected engine) ...Lift cover and PUSH
5. Accomplish ENGINE PRECAUTIONARY SHUTDOWN IN FLIGHT (Tab 23 – Abnormal Procedures)

— END OF PROCEDURE —

L(R) ENG CONTROL FAULT

ON GROUND

1. Do not dispatch

— END OF PROCEDURE —

IN FLIGHT

1. WING FLOW ....FROM R(L) (operable side)

CAUTION *When operating on a single engine bleed with wing anti-ice ON above FL 340, large or sudden thrust changes may result in an ITT exceedance.*

NOTE The **L(R) ENG CONTROL FAULT** message may post if wing anti-ice is active on a single bleed source until WING FLOW is selected from the operable side.

If ENG CONTROL FAULT is still illuminated

2. Thrust Lever (affected engine) .... Avoid rapid movements
3. Engine Indications (affected engine)...................... Monitor
4. Land at nearest suitable airport

— END OF PROCEDURE —

L-R ENG FUEL BYPASS

1. Thrust Levers .... Avoid rapid movements
2. Land at nearest suitable airport

NOTE The **ENG FUEL BYPASS** message will post for an impending bypass condition. The filter has been designed to allow for continued engine operation during the diversion to a suitable landing airport even with a maximum expected level of fuel contamination.

NOTE High differential pressure across the fuel filter is most likely to occur at high power settings such as takeoff, and the message may self clear after power is reduced. If the the message posts and then clears after takeoff, notify maintenance after landing.

— END OF PROCEDURE —

L(R) ENG OIL TEMP HIGH

If high oil temperature occurs after a thrust reduction

1. Thrust Lever (affected engine) ....Advance, if possible

If high oil temperature occurs with engine at high thrust

1. Thrust Lever (affected engine) ....Retard

If ENG OIL TEMP HIGH message remains or other abnormal engine indications are present

2. Accomplish ENGINE PRECAUTIONARY SHUTDOWN IN FLIGHT (Tab 23 – Abnormal Procedures)

— END OF PROCEDURE —

L(R) ENG OVERSPD PROT FAIL

1. Thrust Lever (affected engine) .... IDLE
2. Engine indications (affected engine) .... Monitor

If engine indications remain within limits

3. Thrust Lever (affected engine) ....Maintain at IDLE
4. FUEL CROSSFEED .... As Required
5. WING FLOW ....FROM L(R) (operable side)

CAUTION *When operating on a single engine bleed with wing anti-ice ON above FL 340, large or sudden thrust changes may result in an ITT exceedance.*

6. TCAS (TCAS II only) ....TA ONLY
7. Land at nearest suitable airport
8. Accomplish SINGLE-ENGINE APPROACH AND LANDING (Tab 48 – Abnormal Procedures).

If un-commanded acceleration of affected engine occurs

9. Thrust Lever (affected engine) ....CUT OFF
10. Land at nearest suitable airport
11. Accomplish ENGINE PRECAUTIONARY SHUTDOWN IN FLIGHT (Tab 23 – Abnormal Procedures).

— END OF PROCEDURE —

L(R) FIRE DETECTOR FAIL

If ENGINE FIRE indications were present prior to the failure

1. Consider fire still burning
2. Land at nearest suitable airport.

— END OF PROCEDURE —

If ENGINE FIRE indications were not present prior to the failure

1. Engine Indications (affected side) .... Monitor
2. Continue planned flight

— END OF PROCEDURE —

ENVIRONMENTAL/ PRESSURIZATION SYSTEMS

CRACKED WINDSHIELD OR WINDOW

1. Airspeed ....200 KIAS maximum
2. Descend to 15,000 ft MSL or Minimum Safe Altitude, whichever is higher
3. Land at nearest suitable airport

— END OF PROCEDURE —

CABIN ALT CTRL FAIL

1. PRESSURIZATION CONTROL MODE .... HOLD

PRIOR TO LANDING

2. CABIN DUMP...DUMP

WARNING **The airplane must be unpressurized prior to landing.**

— END OF PROCEDURE —

CABIN ALT CTRL FAULT

FOLLOWING LANDING

1. CABIN DUMP...DUMP

┌ **Procedure Continued** ┐

WARNING **The pressurization controller may not be able to ensure all residual cabin pressure is dumped following landing.**

NOTE The first motion of the main entry door handle operates a small pressure relief valve which will release any residual pressure.

— END OF PROCEDURE —

CABIN ALT HIGH FIELD

1. Oxygen Mask ....Don as required

— END OF PROCEDURE —

L(R) CABIN BLEED FAIL

1. CABIN INFLOW (affected side) ....OFF
2. Altitude...................................Descend to FL 250 or below

— END OF PROCEDURE —

CABIN OXYGEN OFF

If passengers occupy the cabin

1. CABIN OXYGEN.. DROP MASK

— END OF PROCEDURE —

L(R) CABIN BLEED TEMP HIGH

NOTE The COLD button must be released for approximately one second prior to each subsequent re-selection.

If L CABIN BLEED TEMP HIGH message is posted

1. CABIN TEMP............ Press COLD and release (3-5 times)

If R CABIN BLEED TEMP HIGH message is posted

1. COCKPIT TEMP .... Press COLD and release (3-5 times)

If L(R) CABIN BLEED TEMP HIGH message remains posted

2. CABIN INFLOW (affected side) ....OFF
3. Altitude...................................Descend to FL 250 or below

— END OF PROCEDURE —

ECS AIR COND FAIL

1. ECS MODE..MANUAL
2. COCKPIT TEMP .... As required
3. CABIN TEMP... As required

— END OF PROCEDURE —

ECS GND COOLING FAN FAIL

ON GROUND

1. CABIN INFLOW .... Both OFF
2. Dispatch per MEL

— END OF PROCEDURE —

L(R) ENG BLEED FAIL

ON GROUND

1. Associated bleed manifold temperature .... Check

NOTE The **L(R) ENG BLEED FAIL** may post on the ground following power-up if the associated bleed manifold temperature is 75 °C or greater. In this case the message may clear by de-powering the aircraft and allowing the manifold temperature to cool prior to re-powering.

— END OF PROCEDURE —

DURING FLIGHT

1. ENGINE BLEED (affected side) .... OFF

CAUTION *When operating on a single engine bleed with wing anti-ice ON above FL 340, large or sudden thrust changes may result in an ITT exceedance.*

NOTE The **L(R) ENG CONTROL FAULT** message may post if wing anti-ice is active until WING FLOW is selected from the operable side.

2. WING FLOW .... FROM R(L) (operating side)
3. Altitude .... Descend to FL 250 or below

— END OF PROCEDURE —

NO LDG FIELD ELEV

1. Enter flight plan destination or manually enter landing field elevation

If NO LDG FIELD ELEV message remains

2. PRESSURIZATION CONTROL MODE .... HOLD

PRIOR TO LANDING

3. CABIN DUMP .... DUMP

WARNING **The airplane must be unpressurized prior to landing.**

— END OF PROCEDURE —

OXYGEN LOW

1. Descend to 10,000 ft MSL or Minimum Safe Altitude, whichever is higher
2. Oxygen quantity .... Monitor

NOTE The CABIN OXYGEN knob is mechanical and may be difficult to move to the OFF position.

3. CABIN OXYGEN .... OFF
4. Land at nearest suitable airport

— END OF PROCEDURE —

OXYGEN QTY FAIL

1. Descend to 10,000 ft MSL or Minimum Safe Altitude, whichever is higher
2. Land at nearest suitable airport

— END OF PROCEDURE —

OXYGEN UNAVAILABLE

1. OXYGEN SUPPLY.. Verify ON

If OXYGEN UNAVAILABLE message remains

2. Descend to 10,000 ft MSL or Minimum Safe Altitude, whichever is higher
3. Land at nearest suitable airport

— END OF PROCEDURE —

FLIGHT CONTROLS

FLAP FAIL

1. Flaps are inoperative

CAUTION *If the flap position is unknown, limit inflight speed to 160 KIAS and assume the flaps are UP for subsequent landing.*

CAUTION *If the avionics system is unable to determine flap position, the* **STALL PUSHER FAIL** *message will post in combination with this message. Adjustments to the landing speed and distance must be applied for both failures.*

2. Accomplish REDUCED FLAP LANDING (Tab 46 – Abnormal Procedures)

— END OF PROCEDURE —

FLAP FAULT

ON GROUND

1. In some circumstances, the fault may be cleared by cycling aircraft power.

— END OF PROCEDURE —

DURING FLIGHT

1. FLAPS..Monitor operation

— END OF PROCEDURE —

PITCH TRIM FAIL

NOTE In case of a stuck switch, autopilot may continue to function, and pitch trim functionality may be available from the other switch.

1. AUTOPILOT .... Disengage
2. PITCH TRIM MODE.................Cycle STBY then NORM

If pitch trim remains failed

3. PITCH TRIM MODE..STBY
4. Adjust trim by use of the STANDBY PITCH switch

NOTE The autopilot will not be available with a primary pitch trim failure.

5. RVSM airspace...Exit

— END OF PROCEDURE —

SPEEDBRAKE EXTENDED

1. SPEEDBRAKE Lever..RET

If SPEEDBRAKE EXTENDED is still posted

2. Land at nearest suitable airport

CAUTION *Range will be reduced with the speedbrake extended. FMS fuel planning information is based on current flight conditions and may be beneficial to determine available range.*

— END OF PROCEDURE —

FUEL SYSTEMS

FUEL CROSSFEED

1. Fuel Quantity.......................Monitor for excessive decrease

If fuel leak is suspected

2. FUEL CROSSFEED .... NORM
3. Land at nearest suitable airport

— END OF PROCEDURE —

FUEL CROSSFEED FAIL

1. FUEL PUMP....................................... Verify both NORM
2. FUEL CROSSFEED .... Select NORM for 2 seconds, then reselect desired direction

If FUEL CROSSFEED FAIL message remains

3. FUEL PUMP............................ To side OFF, From side ON

If FUEL CROSSFEED FAIL message remains

4. FUEL PUMP... Both NORM
5. FUEL CROSSFEED .... NORM
6. Fuel Quantity.. Monitor
7. Thrust Levers .... Use asymmetric thrust to maintain fuel balance

— END OF PROCEDURE —

FUEL IMBALANCE

1. FUEL CROSSFEED .... Select to side with lower fuel quantity

When FUEL IMBALANCE indication clears

2. FUEL CROSSFEED .... NORM

NOTE An emergency fuel imbalance of 600 pounds has been demonstrated for safe return and landing.

NOTE If a crosswind landing is required with a fuel imbalance greater than 100 lbs, select a runway with the crosswind from the heavy wing side.

— END OF PROCEDURE —

FUEL LEVEL CTRL FAULT

1. Avoid rapid rolling and abrupt pitching maneuvers
2. Land at nearest suitable airport

— END OF PROCEDURE —

L-R FUEL PRESSURE LOW

1. FUEL PUMP (both) .... ON

If FUEL PRESSURE LOW message remains

2. THRUST LEVER (affected engine)..................... Minimum practical setting
3. Altitude........................... Maintain 20,000 ft MSL or below
4. Land at nearest suitable airport

— END OF PROCEDURE —

L(R) FUEL PRESSURE LOW

1. FUEL PUMP (affected side) .... ON

If FUEL PRESSURE LOW message remains

2. THRUST LEVER (affected engine)..................... Minimum practical setting
3. Altitude........................... Maintain 20,000 ft MSL or below
4. Land at nearest suitable airport

— END OF PROCEDURE —

L(R) FUEL PUMP FAIL

1. Solid State Relay (SSR) .... Reset if necessary

If FUEL PUMP FAIL message remains and is accompanied by FUEL QUANTITY LOW indication

2. FUEL PUMP (affected side) .... ON

NOTE If the **FUEL PUMP FAIL** indication remains, indicated fuel quantity below 20 lbs is unusable on the affected side.

— END OF PROCEDURE —

FUEL QTY FAULT

1. Indicated Fuel Quantity........................Check to determine failed system

CAUTION *A* **FUEL QTY FAULT** *which affects the left or right wing tanks will cause the associated* **FUEL QTY LOW** *message to delay posting until the wing tank fuel quantity is as low as 110 lbs.*

NOTE Faults affecting the fuel quantity indication may also affect the Fuel Used information on the Fuel Synoptic page, and Fuel Remaining indications of the Weight and Balance Information on the CDU.

If all fuel tank quantities are still displayed, or the center tank fuel quantity is invalid (“----”)

2. Avoid rapid rolling and abrupt pitch maneuvers
3. Land at nearest suitable airport

CAUTION *If all fuel tank quantities are still displayed, faults may be affecting one or more fuel tanks. All fuel quantity information should be considered inaccurate.*

If L or R fuel tank quantities are displayed as invalid (“----”)

2. Replan flight as necessary

NOTE Displayed fuel quantity information is valid and can be assumed to be available for inflight planning.

— END OF PROCEDURE —

L-R FUEL QTY LOW

L(R) FUEL QTY LOW

CAUTION *A* **FUEL QTY FAULT** *which affects the left or right wing tanks will cause the associated* **FUEL QTY LOW** *message to delay posting until the wing tank fuel quantity is as low as 110 lbs.*

1. Land at nearest suitable airport

— END OF PROCEDURE —

FUEL TEMP HIGH

ON THE GROUND

1. Do not dispatch

— END OF PROCEDURE —

IN FLIGHT

1. FUEL PUMP (affected side) .... ON

If FUEL TEMP HIGH message remains

2. Land at nearest suitable airport

— END OF PROCEDURE —

FUEL TEMP LOW

1. FUEL PUMP (affected side) .... ON
2. Aircraft altitude .... Descend to warmer air

— END OF PROCEDURE —

HYDRAULIC SYSTEMS

HYD PUMP FAIL

1. Hydraulic pressure .... Monitor

— END OF PROCEDURE —

HYD PRESSURE LOW

1. Hydraulic pressure .... Monitor
2. Speedbrake (if installed) ....Do not extend
3. Land at nearest suitable airport

PRIOR TO LANDING

4. Accomplish ALTERNATE GEAR RELEASE EXTENSION (Tab 41 – Abnormal Procedures)

AFTER TOUCHDOWN

5. Normal braking and steering are operable using accumulator pressure

FOLLOWING LANDING ROLLOUT

CAUTION *Following landing rollout, the emergency and brake accumulators may drop below the level required for nosewheel steering and braking.*

6. Do not taxi

— END OF PROCEDURE —

ICE PROTECTION SYSTEMS

L(R) ENG ANTI-ICE FAIL

ON GROUND

1. ENGINE ANTI-ICE (affected engine) .... OFF

If ground icing conditions are present

2. Thrust lever (affected engine)............................... CUT OFF
3. Do not dispatch

--- END OF PROCEDURE ---

DURING FLIGHT

1. ENGINE ANTI-ICE (affected engine) .... OFF
2. Icing Conditions .... Exit

— END OF PROCEDURE —

ICE DETECT FAIL

NOTE When the ice detectors are failed, icing conditions are defined as a SAT of 5 °C to -40 °C in visible moisture.

1. Icing Conditions .... Exit

CAUTION *With a failure of the ice detectors, windshield high heat mode is not available, and the windshield heat may not provide sufficient anti-icing of the windshield.*

2. Select a landing airport free of icing conditions for approach and landing

— END OF PROCEDURE —

If icing conditions are inadvertently encountered

NOTE Monitor ITT during operation of wing anti-ice.

1. ICE PROTECTION (ON)
   a. WING ANTI-ICE .... ON
   b. ENG ANTI-ICE .... ON
   c. TAIL DE-ICE .... ON

NOTE Ice protection must remain ON for a minimum of 3 minutes after exiting icing conditions.

NOTE When the ice detectors are failed, icing conditions are defined as a SAT of 5 °C to -40 °C in visible moisture.

┌ **Procedure Continued** ┐

If an approach and landing must be made through icing conditions

1. Select longest, widest runway available
2. Adjust pilot seat in order to look through the lower forward portion of the side window

CAUTION *With a failure of the ice detectors, windshield high heat mode is not available and the windshield heat may not provide sufficient anti-icing of the windshield.*

3. Use copilot, if available, to adjust power during approach
4. Avoid left crosswind if possible for single pilot operations

DESCENT

1. Landing Field Elevation ....Verify set

NOTE Monitor ITT during operation of wing anti-ice.

2. ICE PROTECTION (ON)
   a. WING ANTI-ICE .... ON
   b. ENG ANTI-ICE... ON
   c. TAIL DE-ICE .... ON
3. Altimeters (transition altitude).. Set

APPROACH

1. Seats and Seat Belts ....Adjusted and secure
2. Passenger Briefing...Complete
3. CABIN SIGNS... As required
4. Avionics.. Set

┌ **Procedure Continued** ┐

ICE DETECT FAIL (Cont)

5. Landing Data .... Set and confirmed
    a. Radios and Navigation .... Set
    b. V-speeds, FMS, and Flight Guidance .... Set, programmed, and modes selected
    c. Landing Distance .... Confirm

NOTE With the wing anti-ice ON, the STALL WARN ICE ADVANCE message will post. Do not fly slower than the approach reference speed (green circle). Refer to UNCORRECTED LANDING FIELD LENGTH, FLAPS TO/APPR – ICING in the Airplane Flight Manual (Section 5 – Performance).

6. CAS Messages .... Check
7. Approach Briefing .... Complete
8. FLAPS .... TO/APPR
9. TAWS Warnings .... Flap Override

BEFORE LANDING

1. LANDING GEAR .... DN
2. SPEEDBRAKE (if installed) .... RET
3. Airspeed .... V_{REF}
4. Autopilot/Yaw Damper .... Disengage

Procedure Continued

LANDING

1. At approximately 300 ft AGL, transition to visual reference looking out side window
2. Thrust Levers .... IDLE
3. Land with minimum flare
4. Brakes..Apply (after touchdown)
5. SPEEDBRAKE (if installed) .... EXT

— END OF PROCEDURE —

ICE PROT NOT ACTIVE

ON GROUND

NOTE Monitor ITT during operation of wing anti-ice.

1. ICE PROTECTION (ON and NORM)
   - a. WING ANTI-ICE .... ON
   - b. ENGINE ANTI-ICE .... ON
   - c. TAIL DE-ICE .... ON
   - d. WINDSHIELD HEAT .... NORM

IN FLIGHT

1. ICE PROTECTION (ON and NORM)

NOTE Monitor ITT during operation of wing anti-ice.

   - a. WING ANTI-ICE .... ON

NOTE Wing anti-ice will not activate automatically above FL 340 when the wing anti-ice switch is in the NORM position, and it must be manually selected ON for flight in icing conditions above FL 340.

   - b. ENGINE ANTI-ICE .... ON
   - c. TAIL DE-ICE .... NORM or ON
   - d. WINDSHIELD HEAT .... NORM

If message does not clear

2. Icing Conditions .... Exit

— END OF PROCEDURE —

L(R) PROBE HEAT FAIL

1. PFD (affected side)..............................Select operable ADC
2. RVSM airspace..Exit
3. Do not perform intentional stalls

NOTE Stall Pusher is inoperative. Stall Warning remains operative based on remaining ADC AOA data.

PRIOR TO LANDING

4. Final approach speed... $V_{REF} + 5$

Flap Setting	Min Approach Speed	Landing Distance
LDG	$V_{REF} + 5$	Add 10%
TO/APPR (ice)	$V_{REF} + 5$	Add 10%

NOTE Due to the stall pusher being inoperative, the minimum approach speed and landing distance factors are defined in the table.

— END OF PROCEDURE —

STBY PROBE HEAT FAIL

1. Disregard standby instrument air data

— END OF PROCEDURE —

TAIL DE-ICE FAIL

1. Solid State Relay (SSR) .... Reset if necessary

37

If TAIL DE-ICE FAIL message remains

2. Icing Conditions ....Exit

— END OF PROCEDURE —

WING ANTI-ICE FAIL

ON GROUND

NOTE The wing anti-ice system performs a self-test after the second engine is started on the ground. If an engine is subsequently shut down or manifold pressure did not remain above 10 psi during the self-test, the **WING ANTI-ICE FAIL** message will post. In this case, the message can be cleared by shutting down the engines and cycling aircraft power off and back on again.

1. WING ANTI-ICE ....OFF

— END OF PROCEDURE —

IN THE AIR

1. WING ANTI-ICE ....OFF
2. Icing Conditions ....Exit

┌ **Procedure Continued** ┐

If wing protected surfaces cannot be confirmed to be free of ice, or icing conditions are expected during approach or landing

3. Accomplish LANDING WITH ICE ACCUMULATION ON WINGS (Tab 45 – Abnormal Procedures)

— END OF PROCEDURE —

WING ANTI-ICE FAIL ON

1. Icing Conditions .... Exit
2. WING ANTI-ICE .... OFF

If WING ANTI-ICE FAIL ON message remains posted

3. Continue with planned flight

FOLLOWING LANDING

4. ENGINE BLEED .... Both OFF

— END OF PROCEDURE —

L(R) WING ANTI-ICE OVERHEAT

1. WING FLOW .... FROM R(L) (opposite engine)

If L(R) WING ANTI-ICE OVERHEAT message remains

2. Icing Conditions .... Exit
3. WING ANTI-ICE .... OFF

If wing protected surfaces cannot be confirmed to be free of ice, or icing conditions are expected during approach or landing

4. Accomplish LANDING WITH ICE ACCUMULATION ON WINGS (Tab 45 – Abnormal Procedures)

— END OF PROCEDURE —

L-R WING A/I TEMP LOW

NOTE Operation of wing anti-ice is not required when SAT is below -40 °C. The **L-R WING A/I TEMP LOW** message may post if the system is operated in these conditions.

NOTE Monitor ITT during operation of wing anti-ice.

NOTE Stall warning ice advance will go to the failure schedule after one minute in icing conditions with the **L-R WING A/I TEMP LOW** message posted.

1. Thrust Levers .... Increase (Minimum 62% N_1)

NOTE If thrust was set below 62% N_1, it may take up to three minutes for the system to warm up sufficiently to clear the message.

NOTE Posting of the **L-R WING A/I TEMP LOW** message may occur if operating in icing conditions outside the approved envelope. However, if the message does not clear within approximately one minute after exiting icing conditions, a system failure is likely and further icing encounters must be avoided.

If L-R WING A/I TEMP LOW message remains posted

2. Icing Conditions ....Exit
3. Accomplish LANDING WITH ICE ACCUMULATION ON WINGS (Tab 45 – Abnormal Procedures)

— END OF PROCEDURE —

┌ **Procedure Continued** ┐

If L-R WING A/I TEMP LOW message clears

2. Continue flight in icing conditions as required

- ***When clear of icing conditions***

CAUTION *Do not attempt more than one reset of the* **STALL WARN ICE ADVANCE** *. Multiple occurrences of the* **L-R WING A/I TEMP LOW** *message likely indicates a system failure.*

3. Stall Warn Ice Advance Reset .... Select
4. WING ANTI-ICE.. ON

NOTE Operate wing anti-ice until the **STALL WARN ICE ADVANCE** message posts (approximately one minute).

5. WING ANTI-ICE.. NORM

— END OF PROCEDURE —

- ***If icing conditions expected through approach and landing***

3. Accomplish LANDING WITH ICE ACCUMULATION ON WINGS (Tab 45 – Abnormal Procedures)

— END OF PROCEDURE —

L(R) WING ANTI-ICE TEMP LOW

NOTE Operation of wing anti-ice is not required when SAT is below -40 °C. If the system is operated in these conditions, the **L(R) WING ANTI-ICE TEMP LOW** message may post.

NOTE Monitor ITT during operation of wing anti-ice.

NOTE Stall warning ice advance will go to the failure schedule after one minute in icing conditions with the **L(R) WING ANTI-ICE TEMP LOW** message posted.

1. Thrust Levers .... Increase (Minimum 62% N_2)

NOTE If thrust was set below 62% N_1, it may take up to three minutes for the system to warm up sufficiently to clear the message.

NOTE Posting of the **L(R) WING ANTI-ICE TEMP LOW** message may occur if operating in icing conditions outside the approved envelope. However, if the message does not clear within approximately one minute after exiting icing conditions, a system failure is likely and further icing encounters must be avoided.

2. WING FLOW...........................FROM R(L) (opposite side)

Procedure Continued

If L(R) WING ANTI-ICE TEMP LOW message remains posted

3. Icing Conditions .... Exit
4. WING ANTI-ICE .... OFF
5. Accomplish LANDING WITH ICE ACCUMULATION ON WINGS (Tab 45 – Abnormal Procedures)

— END OF PROCEDURE —

If L(R) WING ANTI-ICE TEMP LOW message clears

3. Continue flight in icing conditions as required

○ ***When clear of icing conditions***

CAUTION *Do not attempt more than one reset of the* **STALL WARN ICE ADVANCE** *. Multiple occurrences of the* **L(R) WING ANTI-ICE TEMP LOW** *message likely indicates a system failure.*

4. Stall Warn Ice Advance Reset .... Select
5. WING ANTI-ICE .... ON

NOTE Operate wing anti-ice until the **STALL WARN ICE ADVANCE** message posts (approximately one minute).

6. WING ANTI-ICE .... NORM

— END OF PROCEDURE —

○ ***If icing conditions expected through approach and landing***

4. Accomplish LANDING WITH ICE ACCUMULATION ON WINGS (Tab 45 – Abnormal Procedures)

WING ANTI-ICE UNAVAIL

NOTE When operating in the Single Bleed Inoperative Keep Out Zone, the engine is incapable of supporting wing anti-ice using a single bleed source. If wing anti-ice is manually selected ON, the **WING ANTI-ICE UNAVAIL** message will post alerting the pilot that wing anti-ice is unavailable.

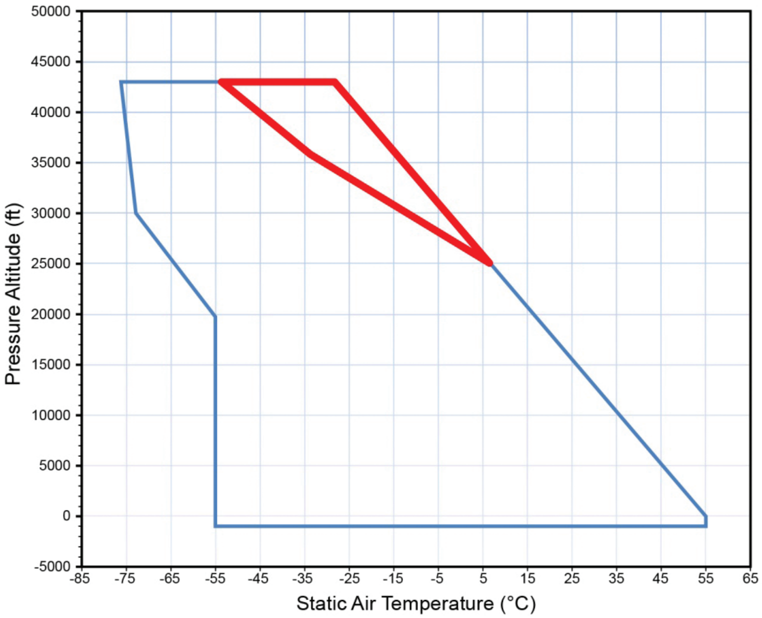

Single Bleed Inoperative Keep Out Zone

1. Remain clear of icing conditions
2. WING ANTI-ICE.. NORM

NOTE Monitor ITT during operation of wing anti-ice.

┌ **Procedure Continued** ┐

If icing conditions are encountered

3. Altitude...................... Expedite descent to FL 250 or below

If wing protected surfaces cannot be confirmed to be free of ice

4. Accomplish LANDING WITH ICE ACCUMULATION ON WINGS (Tab 45 – Abnormal Procedures)

— END OF PROCEDURE —

L(R) WSHD ZONE FAIL

1. Solid State Relay (SSR) .... Reset if necessary

If WSHD ZONE FAIL message remains

2. Icing Conditions...Exit
3. WINDSHIELD HEAT (affected zone)..........................OFF

— END OF PROCEDURE —

L(R) WSHD ZONE OVERHEAT

1. Icing Conditions...Exit
2. WINDSHIELD HEAT (affected zone)..........................OFF

— END OF PROCEDURE —

LANDING GEAR AND BRAKES

ALTERNATE GEAR RELEASE EXTENSION

NOTE Normal landing gear operations cannot be restored in flight after activation of the alternate gear release.

1. LDG GEAR CTRL circuit breaker .... PULL (B7)
2. LANDING GEAR... DN
3. Airspeed .... 150 KIAS minimum
4. ALTERNATE GEAR RELEASE handle .... Pull fully
5. Yaw airplane, if necessary, to obtain gear locked down
6. LANDING GEAR indicator ....Verify three green DN

NOTE The gear DOOR icon will remain posted but a normal landing is possible without gear door-ground contact.

7. ALTERNATE GEAR RELEASE handle .... Stow

CAUTION *The ALTERNATE GEAR RELEASE handle could interfere with thrust lever operation if not stowed following use.*

If all landing gear indicates down and locked

8. Land using normal procedures

— END OF PROCEDURE —

┌ **Procedure Continued** ┐

If all landing gear doesn't indicate down and locked

DESCENT

1. Select a long, wide and dry runway with minimal crosswind
2. Landing Field Elevation .... Verify set
3. ENGINE ANTI-ICE .... As required
4. Altimeters (transition altitude) .... Set

APPROACH

1. Seats and Seat Belts .... Adjusted and secure
2. Passenger Briefing .... Complete
3. CABIN SIGNS .... As required
4. Avionics .... Set
5. Landing Data .... Set and confirmed
6. Radios and Navigation .... Set
7. V-speeds, FMS, and Flight Guidance .... Set, programmed, and modes selected
8. CAS Messages .... Check
9. Approach Briefing .... Complete
10. FLAPS .... TO/APPR

41

BEFORE LANDING

1. SPEEDBRAKE (if installed) .... RET

CAUTION *Do not extend the flaps to LDG unless the airframe can be confirmed free of ice and icing conditions are not expected during approach and landing.*

2. FLAPS .... LDG or TO/APPR (ice)

NOTE If TAWS-A is installed, the TAWS Warnings will annunciate when landing with Flaps at TO/APPR, unless Flap Override is selected.

┌ **Procedure Continued** ┐

ALTERNATE GEAR RELEASE EXTENSION (Cont)

3. Airspeed .... V_{REF}
4. Autopilot/Yaw Damper.................................... Disengage

LANDING

1. Thrust Levers .... IDLE

○ ***If the nosewheel is not down and locked***

2. After touchdown............Hold nose off ground after landing for as long as possible. Lower prior to loss of elevator control

NOTE When the anti-skid system is active during braking, the amount of available differential braking is reduced.

3. Maintain directional control with rudder and differential braking

○ ***If one main wheel is not down and locked***

2. After touchdown........................Hold unsupported wing off ground after landing for as long as possible. Lower wing prior to loss of lateral control
3. Maintain directional control with rudder and nosewheel steering
4. EMERGENCY BRAKE .... Apply gradually

CAUTION *Use of the emergency brake is required to achieve satisfactory braking as anti-skid would cause brakes to release due to one main gear not being down if normal brakes were used.*

┌ **Procedure Continued** ┐

NOTE Gradually pull emergency brake handle until desired braking action is achieved.

NOTE Landing distance will increase by 50%.

5. SPEEDBRAKE (if installed) .... EXT

AFTER AIRCRAFT STOPS

1. Parking Brake.. Set
2. Thrust Levers ....CUT OFF
3. ENGINE FIRE PUSH Switches ....Lift cover and PUSH
4. FIRE EXT PUSH Switch.........................Push (if required)
5. BATTERY ....OFF
6. Evacuate the aircraft using the cabin door and/or the emergency exit

— END OF PROCEDURE —

ANTI-SKID FAIL

PRIOR TO LANDING

1. Select a dry runway

Flap Setting	Min Approach Speed	Landing Distance
LDG	V_{REF}	Add 50%
TO/APPR (ice)	V_{REF}	Add 50%

WARNING **Any braking above light in wet runway conditions could result in blown tires and loss of directional control.**

NOTE Landing distance will increase by 50% on a dry runway and 100% on a wet runway using light braking.

42

AFTER TOUCHDOWN

CAUTION *Brakes must be applied gradually. Light to moderate braking can be applied without skidding tires on a dry surface, however, the pilot should consider runway surface conditions when applying brakes.*

2. Brakes.. Apply gradually

— END OF PROCEDURE —

LDG GEAR FAIL

If LANDING GEAR handle is UP

1. Airspeed ....200 KIAS maximum

— END OF PROCEDURE —

If LANDING GEAR handle is DN and both main gear are indicating down

1. Accomplish ALTERNATE GEAR RELEASE EXTENSION (Tab 41 – Abnormal Procedures)

— END OF PROCEDURE —

If LANDING GEAR handle is DN and both main gear are not indicating down

1. LANDING GEAR.. UP
2. Accomplish ALTERNATE GEAR RELEASE EXTENSION (Tab 41 – Abnormal Procedures)

— END OF PROCEDURE —

NOSEWHEEL STEER FAIL

ON GROUND

1. NOSE WHEEL STEERING .... NORM

If NOSEWHEEL STEER FAIL message remains

1. Do not taxi

— END OF PROCEDURE —

IN THE AIR

1. NOSE WHEEL STEERING .... OFF

PRIOR TO LANDING

2. Select runway aligned with wind

CAUTION *Nosewheel steering is inoperative. Crosswinds should be minimized to ensure a adequate directional control during the low-speed portion of the rollout using differential braking.*

Flap Setting	Min Approach Speed	Landing Distance
LDG	V_{REF}	Add 10%
TO/APPR (ice)	V_{REF}	Add 10%

NOTE Nosewheel Steering has failed. Due to use of differential braking, landing distance will increase by 10%.

┌ **Procedure Continued** ┐

AFTER TOUCHDOWN

NOTE When the anti-skid system is active during braking, the amount of available differential braking is reduced.

3. Maintain directional control with rudder and differential braking

FOLLOWING LANDING ROLLOUT

4. Taxi to parking using differential braking

— END OF PROCEDURE —

PARK BRAKE FAIL

1. Wheel chocks .... Install

— END OF PROCEDURE —

PARK BRAKE ON

1. EMERGENCY/PARKING BRAKE handle ...... Verify fully released

If PARKING BRAKE ON message remains posted

2. Brake pressure .... Monitor

If brake pressure is greater than 175 psi

CAUTION *Main landing gear tires may fail at touchdown.*

3. Select long wide runway

If one or both tires fail

4. EMERGENGY BRAKE .... Apply gradually

— END OF PROCEDURE —

OPERATIONAL

CABIN SYSTEM SHEDDING

1. CABIN POWER..OFF

— END OF PROCEDURE —

LANDING WITH ICE ACCUMULATION ON WINGS

1. Select a long, wide, and dry runway with minimal crosswind

CAUTION *Aircraft response is degraded with ice accumulation on the wings. Crosswinds should be minimized to ensure satisfactory control during approach and landing rollout.*

DESCENT

1. Airspeed .... 200 KIAS or greater
2. Landing Field Elevation .... Verify set
3. ENGINE ANTI-ICE .... As required
4. Altimeters (transition altitude) .... Set

APPROACH

1. Seats and Seat Belts .... Adjusted and secure
2. Passenger Briefing .... Complete
3. CABIN SIGNS .... As required
4. Avionics .... Set
5. Landing Data .... Set and confirmed
    a. Radios and Navigation .... Set
    b. V-speeds, FMS, and Flight Guidance .... Set, programmed, and modes selected
    c. Landing Distance .... Confirm

Flap Setting	Min Approach Speed	Landing Distance
TO/APPR (ice)	$V_{REF} + 35$	Add 75%

┌ **Procedure Continued** ┐

NOTE If **STALL WARN ICE ADVANCE** message is posted with Wing Anti-ice OFF or failed, the minimum speeds, as indicated by the low-speed awareness cues, will be increased. Do not fly slower than the approach reference speed (green circle).

NOTE The minimum approach speed and landing distance factor are defined in the table. Refer to UNCORRECTED LANDING FIELD LENGTH, FLAPS TO/APPR – ICING in the Airplane Flight Manual (Section 5 – Performance).

6. CAS Messages .... Check
7. Approach Briefing .... Complete
8. Airspeed .... V_{REF} +40 minimum
9. TAWS Warnings .... Flap Override

BEFORE LANDING

1. FLAPS .... TO/APPR
2. LANDING GEAR .... DN
3. SPEEDBRAKE (if installed) .... RET
4. Airspeed .... V_{REF} +35
5. Autopilot/Yaw Damper .... Disengage

LANDING

1. Thrust Levers .... IDLE
2. Brakes .... Apply (after touchdown)
3. SPEEDBRAKE (if installed) .... EXT

BALKED LANDING

1. TO/GA .... Press
2. Thrust Levers .... TO

┌ **Procedure Continued** ┐

3. Airspeed .... Maintain V_{REF} +35

LANDING WITH ICE ACCUMULATION ON WINGS (Cont)

When clear of obstacles

CAUTION *Retracting the flaps to UP following an icing encounter with the flaps extended may result in damage to the flaps or airframe.*

NOTE See performance tables in the Airplane Flight Manual (Section 5 – Performance) and either the Quick Reference Handbook (Volume 1, Performance Section) or the Pilot's Operating Manual (Section 2 – Flight Planning).

4. LANDING GEAR...................... UP (positive rate of climb)
5. Yaw Damper .... Engaged
6. Thrust Levers .... MCT
7. Flight Guidance .... As required

— END OF PROCEDURE —

THIS PAGE INTENTIONALLY LEFT BLANK

REDUCED FLAP LANDING

DESCENT

1. Landing Field Elevation ....Verify set
2. ENGINE ANTI-ICE.. As required
3. Altimeters (transition altitude) .... Set

APPROACH

1. Seats and Seat Belts ....Adjusted and secure
2. Passenger Briefing..Complete
3. CABIN SIGNS... As required
4. Avionics... Set
5. Landing Data.. Set and confirmed
    a. Radios and Navigation... Set
    b. V-speeds, FMS, and Flight Guidance ....Set, programmed, and modes selected
    c. Landing Distance..Confirm

Flap Setting	Min Approach Speed	Landing Distance
UP	V_{REF} + 15	Add 30%
TO/APPR	V_{REF} + 5	Add 10%
UP (ice)	V_{REF} + 10	Add 30%

NOTE The minimum approach speed and landing distance factor are defined in the table.

NOTE For landing in icing conditions, refer to UNCORRECTED LANDING FIELD LENGTH, FLAPS TO/APPR – ICING in the Airplane Flight Manual (Section 5 – Performance).

┌ **Procedure Continued** ┐

6. CAS Messages ....Check
7. Approach Briefing..Complete
8. TAWS Warnings ....Flap Override

BEFORE LANDING

1. LANDING GEAR.. DN
2. SPEEDBRAKE (if installed) ....RET
3. Airspeed .... (Flaps UP) – V_{REF} +15
   (Flaps TO/APPR) – V_{REF} +5
   (Flaps UP [ice]) – V_{REF} +10
4. Autopilot/Yaw Damper....................................... Disengage

LANDING

1. Thrust Levers .... IDLE
2. Brakes..Apply (after touchdown)
3. SPEEDBRAKE (if installed) .... EXT

— END OF PROCEDURE —

SIDE WINDOW LANDING

1. Select longest, widest runway available.
2. Adjust pilot seat in order to look through the lower forward portion of the side window.
3. Use copilot, if available, to adjust power during approach.
4. Avoid left crosswind if possible for single pilot operations.

If executing an ILS or LPV APPROACH

5. At approximately 300 ft AGL, transition to visual reference looking out side window.
6. Land with minimum flare.

— END OF PROCEDURE —

If executing a VISUAL APPROACH

5. Conduct approach using a left base to short final.
6. Establish airplane on runway centerline at 300 ft AGL and transition to visual reference looking out the side window.
7. Land with minimum flare.

— END OF PROCEDURE —

THIS PAGE INTENTIONALLY LEFT BLANK

SINGLE-ENGINE APPROACH AND LANDING

DESCENT

1. Landing Field Elevation ....Verify set
2. ENGINE ANTI-ICE.. As required
3. Altimeters (transition altitude) .... Set

APPROACH

1. Seats and Seat Belts ....Adjusted and secure
2. Passenger Briefing..Complete
3. CABIN SIGNS .... As required
4. Avionics.. Set
5. Landing Data.. Set and confirmed
    - a. Radios and Navigation.. Set
    - b. V-speeds, FMS, and Flight Guidance ....Set, programmed, and modes selected
    - c. Landing Distance...Confirm

Flap Setting	Min Approach Speed	Landing Distance
TO/APPR	$V_{REF} + 5$	Add 10%
LDG	V_{REF}	Normal
TO/APPR (ice)	V_{REF}	Normal

6. CAS Messages ....Check
7. Approach Briefing...Complete
8. TAWS Warnings..Flap Override
9. FLAPS...TO/APPR

BEFORE LANDING

1. LANDING GEAR.. DN
2. SPEEDBRAKE (if installed) ....RET
3. FLAPS.. TO/APPR
4. Airspeed .... V_{REF} +5

NOTE Rudder bias function will be momentarily disabled when the AFCS/TRIM MASTER button is pressed. The pilot should be prepared to apply additional rudder pedal force to compensate.

5. AFCS/TRIM MASTER ....Push and release

NOTE Yaw damper status is not annunciated while the rudder bias function is active. Momentary selection of the AFCS/TRIM MASTER will ensure the yaw damper is disengaged for landing.

LANDING ASSURED

1. FLAPS... LDG or TO/APPR (ice)
2. Airspeed ....V_{REF}

LANDING

1. Thrust Lever (operable engine).................................... IDLE
2. Brakes..Apply (after touchdown)
3. SPEEDBRAKE (if installed) .... EXT

— END OF PROCEDURE —

SINGLE-ENGINE MISSED APPROACH

1. TO/GA....................Press
2. Thrust Lever (operable engine)....................TO
3. FLAPS....................TO/APPR
4. Climb airspeed....................V_{AC}
5. LANDING GEAR.................... UP (Positive rate of climb)
6. Yaw Damper....................As required

When clear of obstacles

CAUTION *Retracting the flaps to UP following an icing encounter with the flaps extended may result in damage to the flaps or airframe.*

7. FLAPS....................UP (130 KIAS minimum)
   or TO/APPR (ice)

— END OF PROCEDURE —

┌ **Procedure Continued** ┐

THIS PAGE INTENTIONALLY LEFT BLANK

PILOT NOTES

ADVISORY CAS INDEX

CAS MESSAGES	TAB
ADF FAIL	1
ADS B OUT 1(2) FAIL	1
AFCS FAULT	1
AFCS PITCH SERVO OFF	1
AFCS ROLL SERVO OFF	1
AFCS YAW SERVO OFF	1
AFT BAG DOOR OPEN	3
AIR DATA 1(2) FAULT	1
AUTOPILOT FAIL	1
AUTOPILOT FAULT	1
AVIONICS CONFIG	1
AVIONICS FAULT	1
BATTERY OFF	3
BATTERY 1(2) FAIL	3
BATTERY 1(2) FAULT	3
BUS TIE OPEN	3
CABIN ALT ABOVE 10K	3
CABIN ALT DUMP	3
CABIN ALT FAULT	3
CABIN ALT HOLD	3
L(R) CABIN BLEED FAULT	3
CABIN BUS FAIL	3
CABIN DOOR OPEN	3
L(R) CABIN INFLOW OFF	4

Continued on Next Page

CAS MESSAGES	TAB
CABIN OXYGEN ON	4
CABIN POWER OFF	3
COM 1(2) TEMP HIGH	1
CONFIG BRAKE	1
CONFIG FLAP	1
CONFIG PITCH TRIM	1
CONFIG SPEEDBRAKE	1
CONFIG WING ANTI-ICE	1
CPDLC TEMP HIGH	2
CRUISE SPD CTRL FAIL	2
CVR FAIL	2
DME FAIL	2
ECS AIR COND FAULT	4
ECS TEMP CONTROL MANUAL	4
ELEC SRVC DOOR OPEN	3
EMER BRAKE FAIL	5
L(R) ENG ANTI-ICE FAULT	5
L(R) ENG BLEED FAULT	4
L(R) ENG BLEED OFF	4
L(R) ENG CHIP DETECTED	3
L(R) ENG FAULT	3
L(R) ENG FUEL BYPASS	3
L(R) ENG SHUTDOWN	3
ENG SYNC FAIL	3
L(R) ENG TLD	3
L(R) ENG VIB DETECTOR FAIL	3

CAS MESSAGES	TAB
EXT LIGHTS MAN OFF	6
EXT PWR DOOR OPEN	3
FDR FAIL	2
L(R) FIRE BOTTLE DISCH	3
L(R) FIRE BOTTLE LOW	3
L(R) FIRE EXT FAIL	3
FLAP DEGRADE	4
FLAP LEVER DISAGREE	4
FUEL CROSSFEED OPEN	4
FUEL ISO VALVE CLOSED	4
FUEL ISO VALVE OPEN	4
L(R) FUEL PUMP OFF	4
L(R) FUEL PUMP ON	4
L(R) FUEL QTY DEGRADE	4
L(R) FUEL SOV CLOSED	4
L(R) FUEL SOV FAIL	4
FWD BAG DOOR OPEN	3
L(R) GENERATOR FAULT	3
L(R) GENERATOR OFF	3
GLIDE-SLOPE 1(2) FAIL	2
HYD FLUID LEVEL LOW	5
HYD FLUID OVERFILL	5
HYD PUMP FAIL ON	5
ICE DETECTED	5
ICE DETECT FAULT	5
LDG GEAR DOOR FAIL	6

Continued on Next Page

CAS MESSAGES	TAB
LIGHTING CONTROL 1(2) FAIL	6
MAINTENANCE MODE	2
L(R) MIC STUCK ON	2
NOSEWHEEL STEER FAULT	6
NOSEWHEEL STEER OFF	6
OXYGEN QTY FAULT	4
PITCH TRIM FAULT	4
POWER OUTLETS MAN ON	3
ROLL TRIM FAIL	4
ROLL TRIM FAULT	4
ROLL TRIM OFF	4
RUDDER BIAS FAULT	2
SATCOM FAIL	2
SPEEDBRAKE FAIL	4
STALL SHAKER FAIL	2
STALL WARN ICE ADVANCE	2
STBY AHRS FAIL	2
STBY AIR DATA FAIL	2
STBY PITCH TRIM ON	4
SURFACE WATCH FAIL	2
TAIL DEICE FAIL ON	5
TAIL DEICE FAULT	5
TAIL DEICE OFF	5
TAIL DEICE ON	5
TRANSPONDER 1(2) FAIL	2
WEATHER RADAR FAIL	2

CAS MESSAGES	TAB
WINDSHEAR FAIL	2
WING ANTI-ICE FAULT	5
WING ANTI-ICE OFF	5
WING ANTI-ICE ON	5
WING FLOW FROM L(R)	5
WOW FAULT	6
L(R) WSHD ZONE FAULT	5
L(R) WSHD ZONE OFF	5
XM DATALINK FAIL	3
YAW DAMPER FAULT	3
YAW TRIM FAIL	5
YAW TRIM FAULT	5
YAW TRIM OFF	5

PILOT NOTES

ADVISORY PROCEDURES

AVIONICS/AFCS AS-8
DOORS AS-12
ELECTRICAL SYSTEMS AS-12
ENGINES AS-13
ENVIRONMENTAL/PRESSURIZATION SYSTEMS AS-13
FUEL SYSTEMS AS-14
FLIGHT CONTROLS AS-15
HYDRAULIC SYSTEMS AS-16
ICE PROTECTION SYSTEMS AS-17
LANDING GEAR AND BRAKES AS-18
LIGHTS AS-18

ADVISORY PROCEDURES

CAS MSG	DESCRIPTION	CREW ACTION	DISPATCH
AVIONICS/AFCS			
ADF FAIL	The Automatic Direction Finding system has failed	Use other means of navigation. Note: GNSS may be substituted for ADF per AC 90-108	MEL
ADS B OUT 1(2) FAIL	The ADS-B Out function has failed	Select other transponder (if installed) Consider operational impact	MEL
AFCS FAULT	A fault has been detected by the AFCS system	Crew Awareness	No Dispatch
AFCS PITCH SERVO OFF	Pitch Servo is selected OFF	Crew Awareness Exit RVSM airspace Autopilot and Stall Pusher functions are unavailable	No Dispatch
AFCS ROLL SERVO OFF	Roll Servo is selected OFF	Crew Awareness Exit RVSM airspace Autopilot function is unavailable	No Dispatch
AFCS YAW SERVO OFF	Yaw Servo is selected OFF	Crew Awareness Yaw Damper and Rudder Bias functions are unavailable	No Dispatch

CAS MSG	DESCRIPTION	CREW ACTION	DISPATCH
AIR DATA 1(2) FAULT	The affected air data probe is operating in a degraded mode. Some minor degradation in air data may be experienced under certain flight conditions.	Monitor Standby Flight Instrument	No Dispatch
AUTOPILOT FAIL	The autopilot function has failed	Crew Awareness Exit RVSM airspace	MEL
AUTOPILOT FAULT	An automatic pitch trim fault has been detected by the autopilot. If autopilot is disengaged, it may not be able to be reengaged.	Monitor autopilot operations. Notify maintenance following landing	No Dispatch
AVIONICS CONFIG	The avionics software/ hardware configuration is not correct for the aircraft	Crew Awareness	No Dispatch
AVIONICS FAULT	One or more avionics components are reporting a need for maintenance. One or more displays may be dimmer than usual.	Verify all avionics SD cards are inserted properly. Notify maintenance following landing.	MEL
COM 1(2) TEMP HIGH	Affected radio reporting a high internal temperature – effective range may be reduced	Consider using other radio for ATC communications	MEL
CONFIG BRAKE	Parking brake pressure is greater than 175 psi with the parking brake not set.	Crew Awareness	No Dispatch
CONFIG FLAP	Flaps not set to the correct takeoff position	Correct flap position	No Dispatch
CONFIG PITCH TRIM	Pitch trim not set in the takeoff band	Correct pitch trim	No Dispatch
CONFIG SPEEDBRAKE	Speedbrake not in the takeoff position	Correct speedbrake position	No Dispatch
CONFIG WING ANTI-ICE	Wing anti-ice is active on the ground but wing temperature is less than 10 °C.	Allow wing to warm up before takeoff	No Dispatch

1

Continued on Next Page

CAS MSG	DESCRIPTION	CREW ACTION	DISPATCH
CPDLC TEMP HIGH	The CPDLC radio is reporting a high internal temperature – effective range may be reduced.	Consider operational impact	MEL
CRUISE SPD CTRL FAIL	Cruise speed control has failed	Control speed manually using the thrust levers	MEL
CVR FAIL	The Cockpit Voice Recorder has failed	Consider operational impact	MEL
DME FAIL	Distance measuring equipment has failed	Use other means of navigation. Note: GNSS may be substituted for DME per AC 90-108	MEL
FDR FAIL	The Flight Data Recorder has failed	Consider operational impact	MEL
GLIDE-SLOPE 1(2) FAIL	Affected glide slope has failed	Crew Awareness Use other navigation source	MEL
MAINTENANCE MODE	The avionics system is in maintenance mode	Exit Maintenance Mode	No Dispatch
L(R) MIC STUCK ON	Associated handmic or PTT switch is stuck on	If associated with handmic, unplug associated.	MEL
RUDDER BIAS FAULT	Rudder Bias system has detected a fault but can still activate	Crew Awareness	No Dispatch
SATCOM FAIL	Satellite Communication system has failed including Connext™ Weather, or there has been a failure to receive data correctly during an update	Crew Awareness Another update may be attempted. A successful update will clear the message	MEL
STALL SHAKER FAIL	The stick shaker is unable to actuate a stall warning command	Crew Awareness	No Dispatch

CAS MSG	DESCRIPTION	CREW ACTION	DISPATCH
STALL WARN ICE ADVANCE	Stall Shaker and Pusher trigger thresholds and the approach reference speed (green circle) have been compensated due to ice detection or manual operation of wing anti-ice.	Monitor ITT during both automatic and manual operation of wing anti-ice. If the aircraft cannot be confirmed to be free of ice accumulation, use Flaps TO/APPR for landing. Reference Uncorrected Landing Field Length, Flaps TO/APPR – Icing in the Airplane Flight Manual (Section 5 – Performance).	Not Applicable
STBY AHRS FAIL	The standby AHRS has failed	Crew Awareness	No Dispatch
STBY AIR DATA FAIL	Standby instrument air data computer is not providing proper data	Crew Awareness	No Dispatch
SURFACE WATCH FAIL	SurfaceWatch has failed.	Crew Awareness	MEL
TRANSPONDER 1(2) FAIL	The associated transponder has failed If no transponder is available, TCAS and ADS-B functions are no longer available.	Confirm Transponder 2(1) has activated automatically (if installed) If no transponder is available, the aircraft no longer meets the requirements for flight in RVSM airspace and RVSM airspace must be exited	MEL
WEATHER RADAR FAIL	The weather radar has failed	Crew Awareness	MEL
WINDSHEAR FAIL	The windshear function has failed	Crew Awareness	MEL

Continued on Next Page

CAS MSG	DESCRIPTION	CREW ACTION	DISPATCH
XM DATALINK FAIL	SiriusXM® Datalink Weather and Music is failed or data is missing	Crew Awareness	MEL
YAW DAMPER FAULT	A fault has been detected in the yaw damper	Monitor yaw damper operations. Notify maintenance following landing	No Dispatch
DOORS			
AFT BAG DOOR OPEN	Door open and parking brake set on ground	Crew Awareness	MEL
CABIN DOOR OPEN	Door open and parking brake set on ground	Crew Awareness	MEL
ELEC SRVC DOOR OPEN	Door open	Crew Awareness	MEL
EXT PWR DOOR OPEN	Door open and parking brake set on ground	Crew Awareness	Not Applicable
FWD BAG DOOR OPEN	Door open and parking brake set on ground	Crew Awareness	MEL
ELECTRICAL SYSTEMS			
BATTERY OFF	Battery selected off	Crew Awareness	No Dispatch
BATTERY 1(2) FAIL	The associated battery has failed	Crew Awareness	No Dispatch
BATTERY 1(2) FAULT	A fault has been detected in the battery or charging system, or the battery temperature is too low for charging.	Crew Awareness	No Dispatch
BUS TIE OPEN	BUS TIE switch is selected to OPEN	Crew Awareness	No Dispatch
CABIN BUS FAIL	The Cabin bus has failed	One solid state relay reset may be attempted, if applicable	MEL
CABIN POWER OFF	The Cabin bus has been manually turned off	Crew Awareness	Not Applicable
L(R) GENERATOR FAULT	Minor generator fault detected	Crew Awareness	No Dispatch
L(R) GENERATOR OFF	The affected GEN switch is selected OFF	Crew Awareness	No Dispatch
POWER OUTLETS MAN ON	Power outlets have been commanded on when auto mode would have commanded them off	Crew Awareness	No Dispatch

CAS MSG	DESCRIPTION	CREW ACTION	DISPATCH
ENGINES			
L(R) ENG FAULT	Minor engine fault detected	Crew Awareness	No Dispatch
L(R) ENG CHIP DETECTED	Engine oil chip detected	Continue planned flight	No Dispatch
L(R) ENG FUEL BYPASS	An impending bypass of the associated fuel filter has been detected	Continue planned flight	No Dispatch
L(R) ENG SHUTDOWN	Engine is shutdown	Crew Awareness	No Dispatch
ENG SYNC FAIL	Engine sync has failed	Crew Awareness CSC will not be available.	MEL
L(R) ENG TLD	Minor failure detected	Crew Awareness	MEL
L(R) ENG VIB DETECTOR FAIL	The associated engine vibration detector has failed	Crew Awareness	No Dispatch
L(R) FIRE BOTTLE DISCH	Affected fire bottle has been discharged	Crew Awareness	No Dispatch
L(R) FIRE BOTTLE LOW	The associated engine fire extinguisher pressure is low and may not be adequate to extinguish a fire	Continue planned flight	No Dispatch
L(R) FIRE EXT FAIL	Fire extinguisher has failed	Crew Awareness	No Dispatch
ENVIRONMENTAL/PRESSURIZATION SYSTEMS			
CABIN ALT ABOVE 10K	Cabin altitude exceeds 10,000 feet when operating in High Field Mode	Crew Awareness	Inflight Only Message
CABIN ALT DUMP	Pressurization selected to DUMP mode	Crew Awareness	MEL
CABIN ALT FAULT	Fault in the cabin pressurization system	Crew Awareness	MEL
CABIN ALT HOLD	Pressurization selected to HOLD mode	Crew Awareness	No Dispatch
L(R) CABIN BLEED FAULT	A fault in the affected cabin bleed system detected	Crew Awareness	MEL

Continued on Next Page

CAS MSG	DESCRIPTION	CREW ACTION	DISPATCH
L(R) CABIN INFLOW OFF	Associated inflow selected OFF	Crew Awareness Maximum Pressure Altitude 25,000 feet	MEL
CABIN OXYGEN ON	Cabin oxygen system is on	Crew Awareness	No Dispatch
ECS AIR COND FAULT	Either the cockpit or cabin evaporator fan has failed	Crew Awareness If cooling is insufficient, ECS Manual Mode may improve cooling	MEL
ECS TEMP CONTROL MANUAL	ECS manual mode has been selected	Crew Awareness	Yes
L(R) ENG BLEED FAULT	A fault in the affected engine bleed system detected	Crew Awareness	MEL
L(R) ENG BLEED OFF	Bleed selected off	Crew Awareness Maximum pressure altitude is 25,000 feet	MEL
OXYGEN QTY FAULT	A fault has been detected in the oxygen quantity display	Crew Awareness	No Dispatch
FUEL SYSTEMS			
FUEL CROSSFEED OPEN	Fuel Crossfeed valve is open when commanded closed	Monitor fuel balance and crossfeed as required	No Dispatch
FUEL ISO VALVE CLOSED	Isolation valve has failed in the closed position	Crew Awareness Refuel system is inoperative	MEL
FUEL ISO VALVE OPEN	Fuel isolation SOV has failed in the open position	Crew Awareness	MEL
L(R) FUEL PUMP OFF	Affected FUEL PUMP switch selected OFF	Crew Awareness	No Dispatch
L(R) FUEL PUMP ON	Affected fuel pump is commanded on automatically or via the switch	Crew Awareness	No Dispatch

CAS MSG	DESCRIPTION	CREW ACTION	DISPATCH
L(R) FUEL QTY DEGRADE	A single fuel quantity probe has failed in the affected fuel tank	Monitor affected fuel quantity	No Dispatch
L(R) FUEL SOV FAIL	Fuel shutoff valve has failed to achieve commanded position	Crew Awareness	No Dispatch
L(R) FUEL SOV CLOSED	The Fuel SOV Valve is closed	Crew Awareness	No Dispatch
FLIGHT CONTROLS			
FLAP DEGRADE	Minor flap fault detected	Crew Awareness	MEL
FLAP LEVER DISAGREE	The flap handle does not match the flap position after initial power-up	Select new flap position and then reset to current flap position.	No Dispatch
PITCH TRIM FAULT	A fault has been detected by the pitch trim system. One side of pitch trim indication displaying “X” indicates a failure of one trim tab. In this case the trim rate will be degraded.	Crew Awareness If the trim rate is degraded, avoid rapid speed changes.	No Dispatch
ROLL TRIM FAIL	Roll trim has failed or a stuck switch has been detected and disabled	In the event of a stuck trim switch, roll trim may be regained by cycling the ROLL TRIM POWER to OFF and then back to NORM.	No Dispatch
ROLL TRIM FAULT	A fault has been detected by the roll trim system	Crew Awareness	MEL
ROLL TRIM OFF	Roll trim is selected OFF	Crew Awareness	No Dispatch
SPEEDBRAKE FAIL	Speedbrake has failed	Crew Awareness	MEL
STBY PITCH TRIM ON	Standby pitch trim has been selected	Crew Awareness Exit RVSM airspace Normal pitch trim is not available Autopilot will not be available	No Dispatch

Continued on Next Page

CAS MSG	DESCRIPTION	CREW ACTION	DISPATCH
YAW TRIM FAIL	Yaw trim has failed or a stuck switch has been detected	Crew Awareness For a stuck trim switch, functionality might be regained by cycling the YAW TRIM POWER switch to OFF and back to NORM	No Dispatch
YAW TRIM FAULT	A fault has been detected by the yaw trim system	Crew Awareness	MEL
YAW TRIM OFF	Yaw trim has been selected OFF	Crew Awareness	No Dispatch
HYDRAULIC SYSTEMS			
EMER BRAKE FAIL	Emergency brake accumulator pressure is less than 1650 psi	Crew Awareness	No Dispatch
HYD FLUID LEVEL LOW	The hydraulic reservoir fluid level is below allowable limits	Monitor hydraulic pressure and reservoir fluid level. Service hydraulic fluid prior to next flight.	MEL
HYD FLUID OVERFILL	The hydraulic reservoir fluid level is above allowable limits	Service hydraulic fluid prior to next flight	MEL
HYD PUMP FAIL ON	Hydraulic pump has failed on	Monitor hydraulic pressure	No Dispatch

CAS MSG	DESCRIPTION	CREW ACTION	DISPATCH
ICE PROTECTION SYSTEMS			
L(R) ENG ANTI-ICE FAULT	A fault has been detected in the affected engine anti-ice system	Crew Awareness	MEL
ICE DETECTED	Ice has been detected	Crew Awareness For planes that have NOT accomplished GHAE SB 72-0021: Notify maintenance following landing Maintenance action (LMM task 72-00-00-200-804) required within two flights	Not Applicable
ICE DETECT FAULT	One ice detector has failed	Exit icing conditions	MEL
TAIL DEICE FAIL ON	The tail de-ice system has failed on	Crew Awareness	MEL
TAIL DEICE FAULT	There is a degradation in tail de-icing capability	Exit icing conditions	MEL
TAIL DEICE OFF	The TAIL DE-ICE switch has been selected OFF	Crew Awareness	MEL
TAIL DEICE ON	The TAIL DE-ICE switch has been selected ON	Crew Awareness	Not Applicable
WING ANTI-ICE FAULT	A fault has been detected in the wing anti-ice system	Exit icing conditions	MEL
WING ANTI-ICE OFF	WING ANTI-ICE switch selected OFF	Crew Awareness	MEL
WING ANTI-ICE ON	WING ANTI-ICE switch selected ON	Monitor ITT during operation of wing anti-ice	Not Applicable
WING FLOW FROM L(R)	WING FLOW switch selected FROM L(R)	Crew Awareness	No Dispatch
L(R) WSHD ZONE FAULT	Affected zone unable to select high heat mode	Exit icing conditions	MEL
L(R) WSHD ZONE OFF	Applicable windshield zone switch selected OFF	Crew Awareness	MEL

5

Continued on Next Page

CAS MSG	DESCRIPTION	CREW ACTION	DISPATCH
LANDING GEAR AND BRAKES			
LDG GEAR DOOR FAIL	Landing gear door failed to close	Crew Awareness	No Dispatch
NOSEWHEEL STEER FAULT	A fault has been detected in the Nosewheel Steering system	NOSEWHEEL STEERING switch should remain in the NORM position during flight and taxi operations to prevent a steering uncommand movement. Note: When the aircraft is completely stopped, cycling the NOSEWHEEL STEERING switch may clear the message if the fault condition no longer exists	No Dispatch
NOSEWHEEL STEER OFF	NOSEWHEEL STEERING switch selected OFF	Crew Awareness	No Dispatch
WOW FAULT	WOW system disagree	Crew Awareness	No Dispatch
LIGHTS			
EXT LIGHTS MAN OFF	Some external lights have manually been selected OFF when automatic logic had determined they should be on	Crew Awareness	Yes
LIGHTING CONTROL 1(2) FAIL	The associated lighting controller has failed	Some lighting control may be unavailable Associated lights fail to a default configuration	MEL

6

THIS PAGE INTENTIONALLY LEFT BLANK

PILOT NOTES

SUPPLEMENTAL INFORMATION

BLEED AIR – SUPPLY SI-3
BLEED AIR – ENVIRONMENTAL SI-4
BLEED AIR – PRESSURIZATION SI-5
BLEED AIR – ICE PROTECTION SI-6
ELECTRICAL SYSTEM SI-7
ELECTRICAL BUS ALLOCATION SI-8
FUEL SYSTEM – SUPPLY SI-9
FUEL SYSTEM – GAUGING SI-10
FIRE PROTECTION SYSTEM SI-11
HYDRAULIC SYSTEM – SUPPLY SI-12
HYDRAULIC SYSTEM – MAIN SI-13
HYDRAULIC SYSTEM – BRAKES SI-14
HYDRAULIC SYSTEM – EMERGENCY SI-15
OXYGEN SYSTEM SI-16
EMERGENCY/ABNORMAL/ADVISORY CAS INDEX SI-18

PILOT NOTES

BLEED AIR – SUPPLY

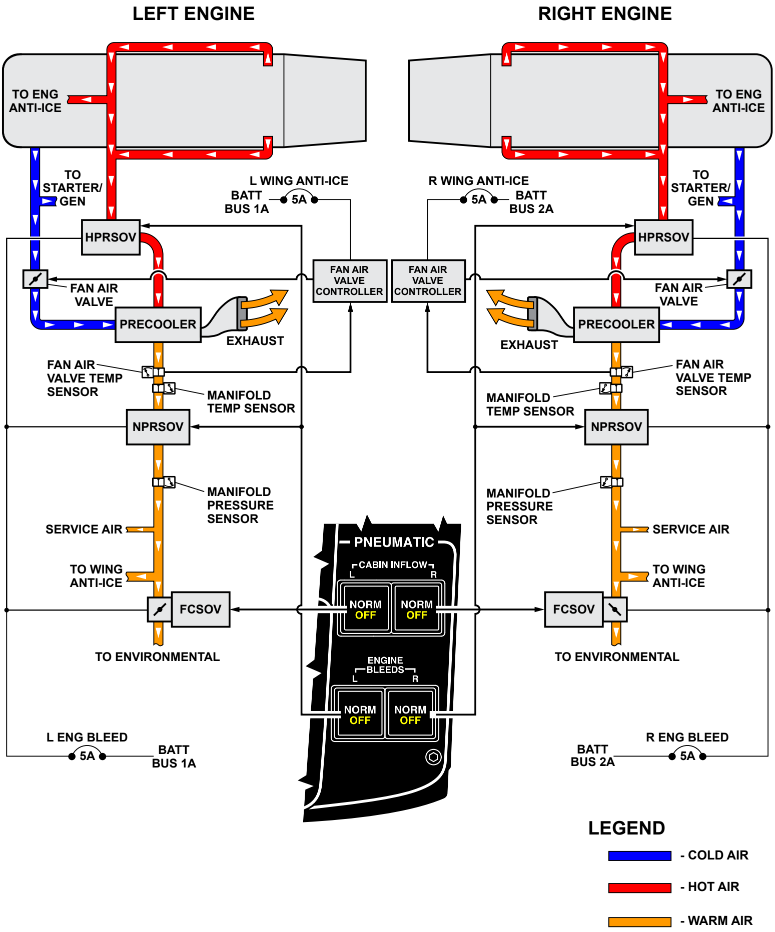
LEFT ENGINE
RIGHT ENGINE
TO ENG ANTI-ICE
TO ENG ANTI-ICE
TO STARTER/ GEN
TO STARTER/ GEN
L WING ANTI-ICE
BATT BUS 1A
5A
R WING ANTI-ICE
5A
BATT BUS 2A
HPRSOV
HPRSOV
FAN AIR VALVE CONTROLLER
FAN AIR VALVE CONTROLLER
FAN AIR VALVE
FAN AIR VALVE
PRECOOLER
PRECOOLER
EXHAUST
EXHAUST
FAN AIR VALVE TEMP SENSOR
FAN AIR VALVE TEMP SENSOR
MANIFOLD TEMP SENSOR
MANIFOLD TEMP SENSOR
NPRSOV
NPRSOV
MANIFOLD PRESSURE SENSOR
MANIFOLD PRESSURE SENSOR
SERVICE AIR
SERVICE AIR
TO WING ANTI-ICE
TO WING ANTI-ICE
FCSOV
FCSOV
TO ENVIRONMENTAL
TO ENVIRONMENTAL
PNEUMATIC
CABIN INFLOW
L
R
NORM
OFF
NORM
OFF
ENGINE BLEEDS
L
R
NORM
OFF
NORM
OFF
L ENG BLEED
5A
BATT BUS 1A
R ENG BLEED
BATT BUS 2A
5A
LEGEND
- COLD AIR
- HOT AIR
- WARM AIR

BLEED AIR – ENVIRONMENTAL

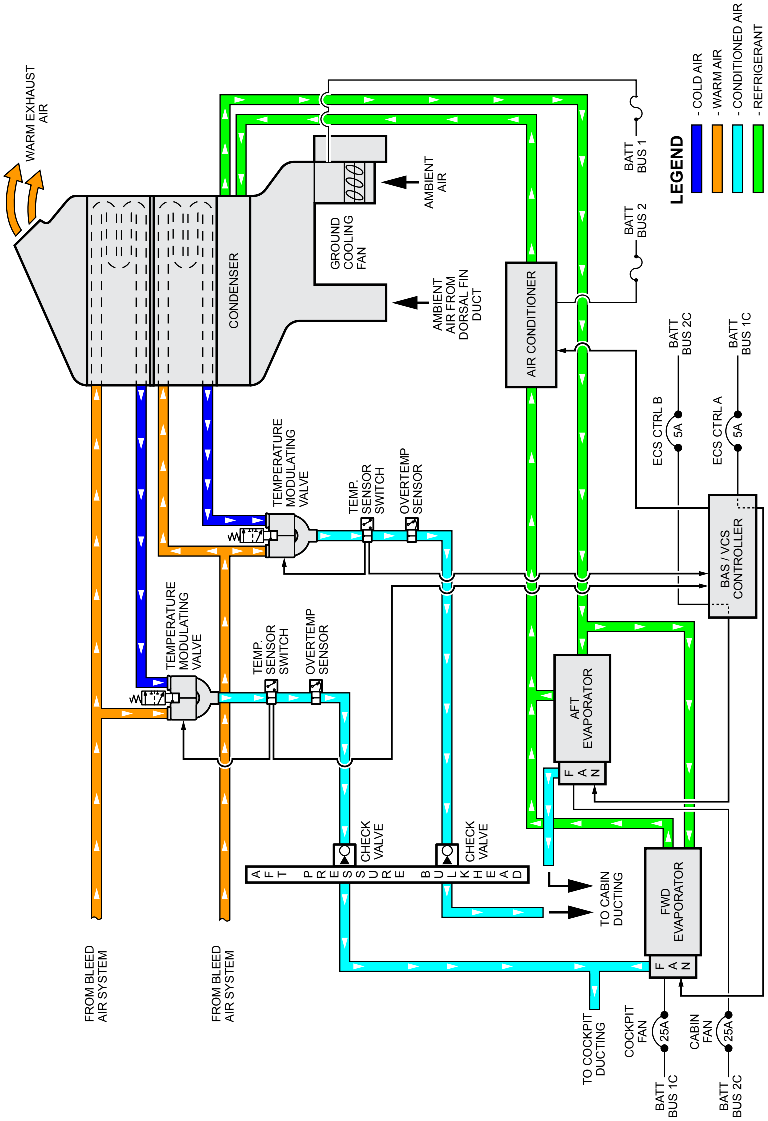
WARM EXHAUST AIR
CONDENSER
GROUND COOLING FAN
AMBIENT AIR
AMBIENT AIR FROM DORSAL FIN DUCT
AIR CONDITIONER
BATT BUS 1
BATT BUS 2
LEGEND
🟦 - COLD AIR
🟧 - WARM AIR
🟦 - CONDITIONED AIR
🟩 - REFRIGERANT
BATT BUS 2C
BATT BUS 1C
ECS CTRL B
5A
ECS CTRL A
5A
BAS / VCS CONTROLLER
TEMPERATURE MODULATING VALVE
TEMP. SENSOR SWITCH
OVERTEMP SENSOR
TEMPERATURE MODULATING VALVE
TEMP. SENSOR SWITCH
OVERTEMP SENSOR
AFT EVAPORATOR
FAN
CHECK VALVE
CHECK VALVE
AFT PRESSURE BULKHEAD
TO CABIN DUCTING
FWD EVAPORATOR
FAN
FROM BLEED AIR SYSTEM
FROM BLEED AIR SYSTEM
TO COCKPIT DUCTING
COCKPIT FAN
25A
CABIN FAN
25A
BATT BUS 1C
BATT BUS 2C

BLEED AIR – PRESSURIZATION

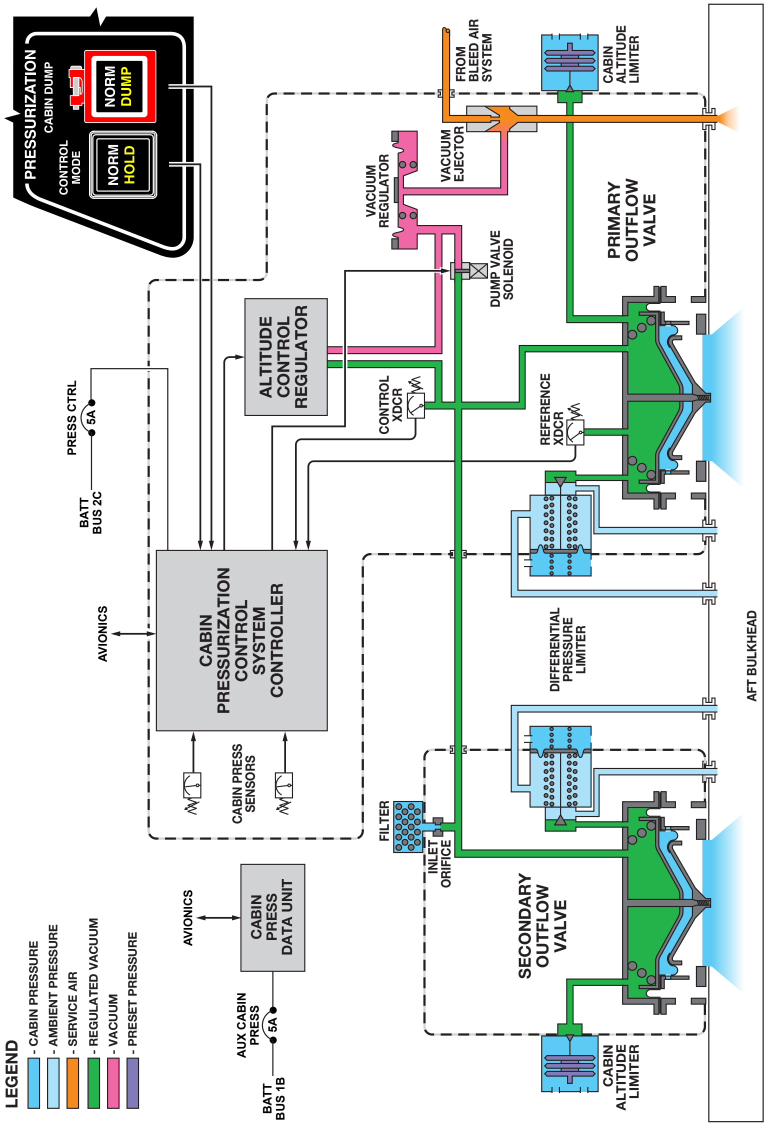
PRESSURIZATION
CABIN DUMP
NORM
DUMP
CONTROL MODE
NORM
HOLD
PRESS CTRL
5A
BATT BUS 2C
AVIONICS
CABIN PRESSURIZATION CONTROL SYSTEM CONTROLLER
CABIN PRESS SENSORS
ALTITUDE CONTROL REGULATOR
CONTROL XDCR
VACUUM REGULATOR
VACUUM EJECTOR
FROM BLEED AIR SYSTEM
DUMP VALVE SOLENOID
CABIN ALTITUDE LIMITER
PRIMARY OUTFLOW VALVE
REFERENCE XDCR
DIFFERENTIAL PRESSURE LIMITER
AFT BULKHEAD
FILTER
INLET ORIFICE
SECONDARY OUTFLOW VALVE
CABIN ALTITUDE LIMITER
AVIONICS
CABIN PRESS DATA UNIT
AUX CABIN PRESS
5A
BATT BUS 1B
LEGEND
- CABIN PRESSURE
- AMBIENT PRESSURE
- SERVICE AIR
- REGULATED VACUUM
- VACUUM
- PRESET PRESSURE

BLEED AIR – ICE PROTECTION

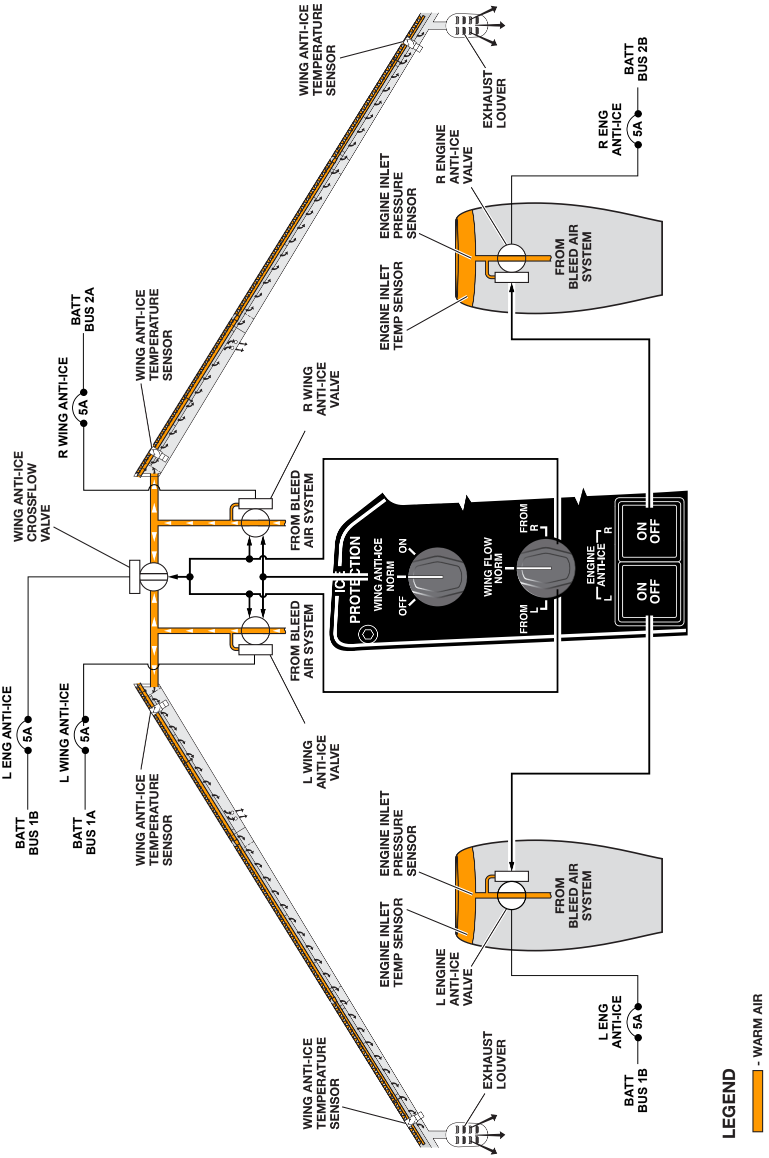
WING ANTI-ICE TEMPERATURE SENSOR
EXHAUST LOUVER
BATT BUS 2B
R ENG ANTI-ICE
5A
R ENGINE ANTI-ICE VALVE
ENGINE INLET PRESSURE SENSOR
ENGINE INLET TEMP SENSOR
FROM BLEED AIR SYSTEM
BATT BUS 2A
R WING ANTI-ICE
5A
WING ANTI-ICE TEMPERATURE SENSOR
R WING ANTI-ICE VALVE
WING ANTI-ICE CROSSFLOW VALVE
FROM BLEED AIR SYSTEM
ICE PROTECTION
WING ANTI-ICE
OFF
NORM
ON
WING FLOW
NORM
FROM L
FROM R
ENGINE ANTI-ICE
L
R
ON
OFF
ON
OFF
FROM BLEED AIR SYSTEM
L ENG ANTI-ICE
5A
BATT BUS 1B
L WING ANTI-ICE
5A
BATT BUS 1A
WING ANTI-ICE TEMPERATURE SENSOR
L WING ANTI-ICE VALVE
ENGINE INLET PRESSURE SENSOR
ENGINE INLET TEMP SENSOR
FROM BLEED AIR SYSTEM
L ENGINE ANTI-ICE VALVE
L ENG ANTI-ICE
5A
BATT BUS 1B
WING ANTI-ICE TEMPERATURE SENSOR
EXHAUST LOUVER
LEGEND
- WARM AIR

ELECTRICAL SYSTEM

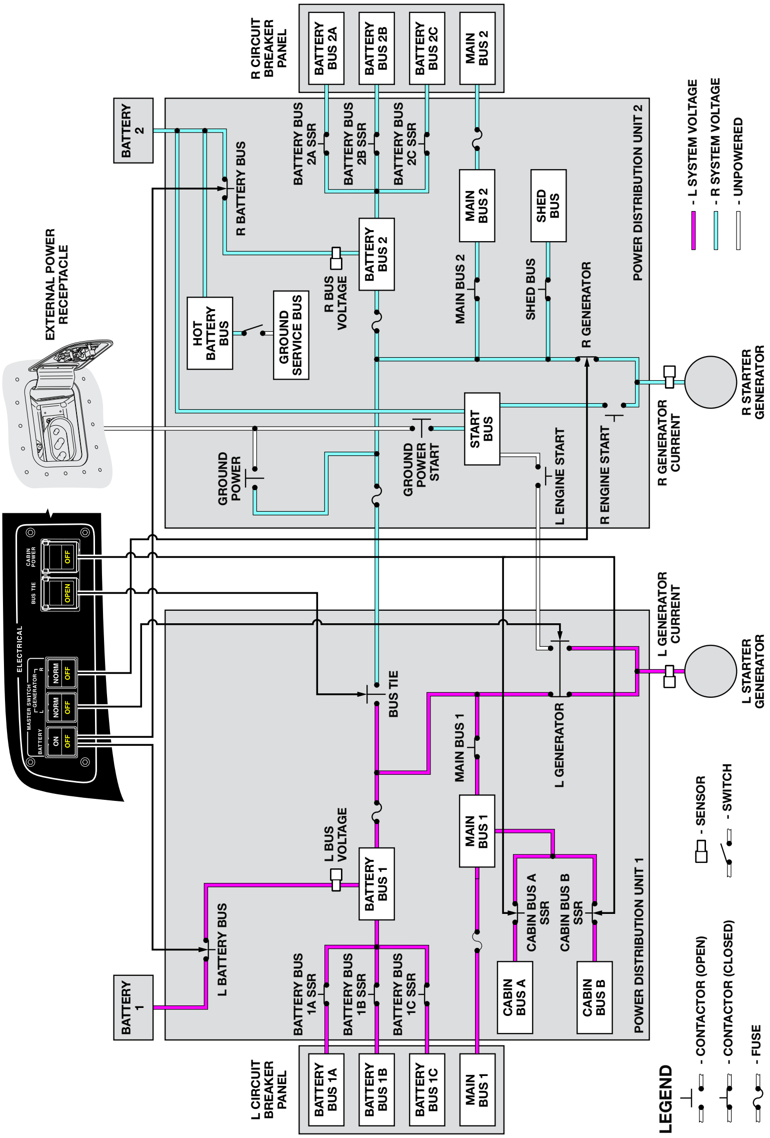
R CIRCUIT BREAKER PANEL
BATTERY BUS 2A
BATTERY BUS 2B
BATTERY BUS 2C
MAIN BUS 2
BATTERY 2
R BATTERY BUS
BATTERY BUS 2A SSR
BATTERY BUS 2B SSR
BATTERY BUS 2C SSR
BATTERY BUS 2
R BUS VOLTAGE
MAIN BUS 2
MAIN BUS 2
SHED BUS
SHED BUS
POWER DISTRIBUTION UNIT 2
R GENERATOR
HOT BATTERY BUS
GROUND SERVICE BUS
EXTERNAL POWER RECEPTACLE
GROUND POWER
GROUND POWER START
START BUS
L ENGINE START
R ENGINE START
R GENERATOR CURRENT
R STARTER GENERATOR
ELECTRICAL
MASTER SWITCH
BATTERY
ON
OFF
GENERATOR
L
NORM
OFF
R
NORM
OFF
BUS TIE
OPEN
CABIN POWER
OFF
BUS TIE
L GENERATOR CURRENT
L STARTER GENERATOR
L GENERATOR
MAIN BUS 1
MAIN BUS 1
L BUS VOLTAGE
BATTERY BUS 1
L BATTERY BUS
BATTERY 1
CABIN BUS A SSR
CABIN BUS B SSR
CABIN BUS A
CABIN BUS B
BATTERY BUS 1A SSR
BATTERY BUS 1B SSR
BATTERY BUS 1C SSR
POWER DISTRIBUTION UNIT 1
L CIRCUIT BREAKER PANEL
BATTERY BUS 1A
BATTERY BUS 1B
BATTERY BUS 1C
MAIN BUS 1
- L SYSTEM VOLTAGE
- R SYSTEM VOLTAGE
- UNPOWERED
- SENSOR
- SWITCH
LEGEND
- CONTACTOR (OPEN)
- CONTACTOR (CLOSED)
- FUSE

ELECTRICAL BUS ALLOCATION

BAT 1
FLAP MTR
GND COOLING FAN
L FUEL BOOST
L LOW FUEL
MOSOV POWER CLS
MOSOV POWER OPN
HYD PUMP

BAT BUS 1A
AUDIO A
CDU 1
COM 1
CTR FUEL QTY
CTRL YOKE
DAU 1
DAU 3
DCU 1
INSTR PNL LTS A
L BLEED LEAK
L ENG BLEED
L FADEC CH A
L FIRE DETECT
L FUEL QTY
L FUEL VALVE
L IGNITION CH A
L PFD
L WING ANTI-ICE
LDG GEAR CTRL
LIGHTING CTRL 1
NAV 1/AFCS 1
R FADEC CH A
R IGNITION A
STBY ADC
STBY INSTR
STBY MAG
XPDR 1

BAT BUS 1B
AFCS
AHRS 1
ANTI-SKID CTRL
AUX CABIN PRESS
COCKPIT FLOOD
LIGHTS
FLAP CTRL
ICE DETECT 1
L ENG ANTI-ICE
L FIRE EXT
L LANDING LIGHT
ECS MAN TEMP PROT
NOSE WHEEL STEER
PITCH TRIM
R GCU B
ROLL TRIM
STALL WARN
STBY PROBE HEAT
YAW SERVO A
YAW TRIM

BAT BUS 1C
ADC 1
BEACON LIGHT
COCKPIT FAN
ECS CTRL A
SAT WX DATALINK

MAIN BUS 1
L GCU A
L GCU POR
L PROBE HEAT
PITCH SERVO
ROLL SERVO
TAIL DE-ICE A
TAIL DE-ICE CTRL A
TCAS

MAIN BUS 1, CONT.
W/S HTR CTRL 1
W/S HTR CTRL 3
WSHLD HEAT L ZONE
WX RADAR

CABIN A
CABIN LTS 1
CABIN LTS 2
CAB INVRTR 1
CABIN SYS 1
CABIN SYS 2
CABIN SYS 3

CABIN B
ATG
CAB INVRTR 2
CABIN AMP
CABIN SYS 4
CABIN SYS 5
INMARSAT
IRIDIUM
XM RADIO

HOT BUS
CRTSY LTS
SVC LTS

BAT BUS 2
COMPRESSOR DRV
OIL QTY
R FUEL BOOST
R LOW FUEL
VIBE MON

BAT BUS 2A
FUEL CROSSFEED
L FADEC CH B

BAT BUS 2A, CONT.
L IGNITION CH B
NAV 2 / AFCS 2
R BLEED LEAK
R ENG BLEED
R FAD EC CH B
R FIRE DETECT
R FUEL QTY
R FUEL VALVE
R IGNITION B
R WING ANTI-ICE

BAT BUS 2B
AUDIO B
DAU 2
DCU 2
HYD PRESS
ICE INSP LIGHT
L GCU B
MFD
OXYGEN
R ENG ANTI-ICE
R FIRE EXT
SPEED BRAKE
STBY PITCH TRIM
STROBE LIGHTS
YAW SERVO B

BAT BUS 2C
CABIN FAN
CABIN TEMP
COM 3
ECS CTRL B
FWD EQUIP FAN
PRESS CTRL

MAIN BUS 2
ADC 2
ADF
AHRS 2

MAIN BUS 2, CONT.
CDU 2
COM 2
CVR/FDR
DME
ICE DETECT 2
INSTR PNL LTS B
LIGHTING CTRL 2
MAP LIGHTS
NAV LIGHTS
R GCU A
R GCU POR
R LANDING LIGHT
R PFD
R PROBE HEAT
RECOG LIGHTS
TAIL DE-ICE B
TAIL DE-ICE CTRL B
TAXI LIGHTS
TOILET PUMP
W/S HTR CTRL 2
W/S HTR CTRL 4
WSHLD HEAT R ZONE
XPDR 2
RADIO ALT

SHED BUS
FLASH LT
DATALINK
LOGO LT
SATCOM
SATCOM HTR
WATER PUMP

GND SVC
REFUEL A
TOILET MACTR

FUEL SYSTEM – SUPPLY

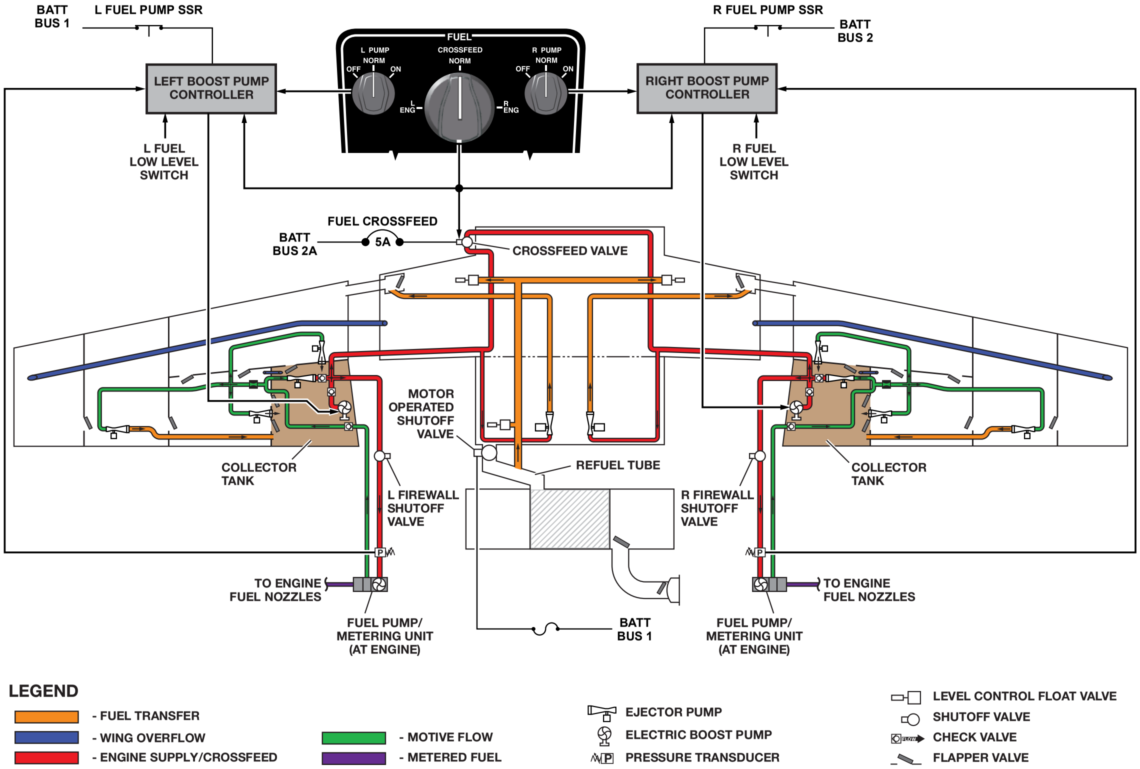
BATT
BUS 1
L FUEL PUMP SSR
LEFT BOOST PUMP CONTROLLER
L FUEL LOW LEVEL SWITCH
FUEL
L PUMP
OFF
NORM
ON
CROSSFEED
NORM
L ENG
R ENG
R PUMP
OFF
NORM
ON
R FUEL PUMP SSR
BATT
BUS 2
RIGHT BOOST PUMP CONTROLLER
R FUEL LOW LEVEL SWITCH
FUEL CROSSFEED
BATT
BUS 2A
5A
CROSSFEED VALVE
MOTOR OPERATED SHUTOFF VALVE
REFUEL TUBE
COLLECTOR TANK
COLLECTOR TANK
L FIREWALL SHUTOFF VALVE
R FIREWALL SHUTOFF VALVE
P
P
TO ENGINE FUEL NOZZLES
TO ENGINE FUEL NOZZLES
FUEL PUMP/ METERING UNIT (AT ENGINE)
FUEL PUMP/ METERING UNIT (AT ENGINE)
BATT
BUS 1
LEGEND
- FUEL TRANSFER
- WING OVERFLOW
- ENGINE SUPPLY/CROSSFEED
- MOTIVE FLOW
- METERED FUEL
EJECTOR PUMP
ELECTRIC BOOST PUMP
PRESSURE TRANSDUCER
LEVEL CONTROL FLOAT VALVE
SHUTOFF VALVE
CHECK VALVE
FLOW
FLAPPER VALVE

FUEL SYSTEM – GAUGING

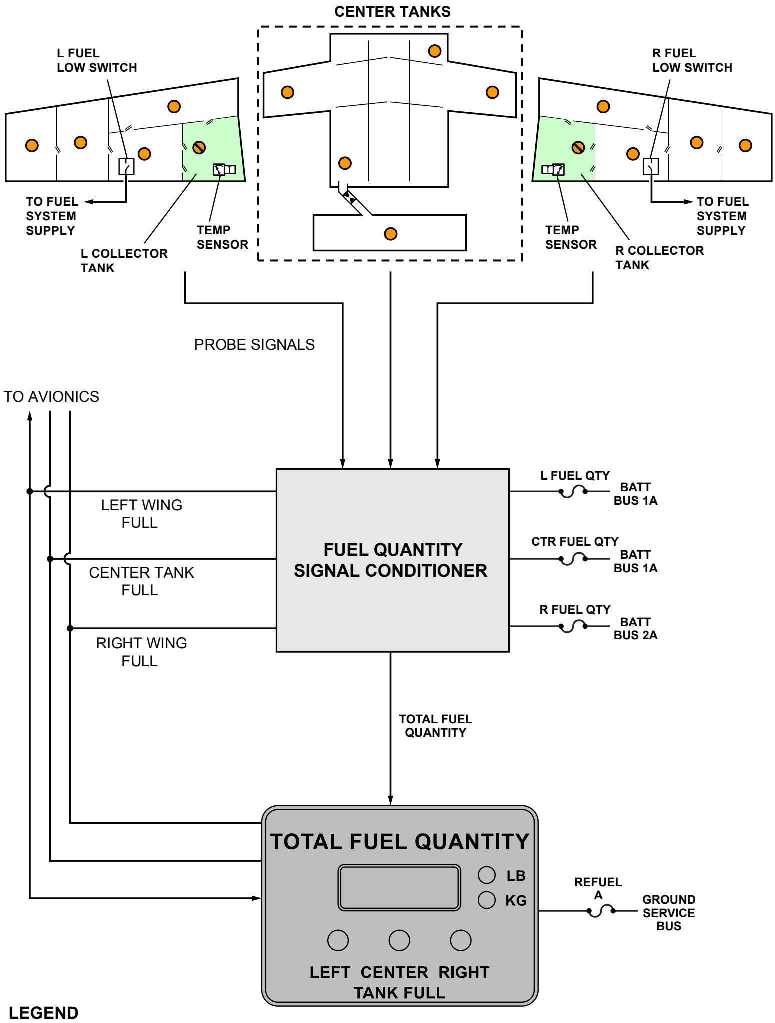
CENTER TANKS
L FUEL LOW SWITCH
R FUEL LOW SWITCH
TO FUEL SYSTEM SUPPLY
TEMP SENSOR
L COLLECTOR TANK
TEMP SENSOR
R COLLECTOR TANK
TO FUEL SYSTEM SUPPLY
PROBE SIGNALS
TO AVIONICS
LEFT WING FULL
CENTER TANK FULL
RIGHT WING FULL
FUEL QUANTITY SIGNAL CONDITIONER
L FUEL QTY
BATT BUS 1A
CTR FUEL QTY
BATT BUS 1A
R FUEL QTY
BATT BUS 2A
TOTAL FUEL QUANTITY
TOTAL FUEL QUANTITY
LB
KG
LEFT CENTER RIGHT
TANK FULL
REFUEL A
GROUND SERVICE BUS

LEGEND

● - FUEL PROBE

⊘ - COMPENSATED FUEL PROBE

FIRE PROTECTION SYSTEM

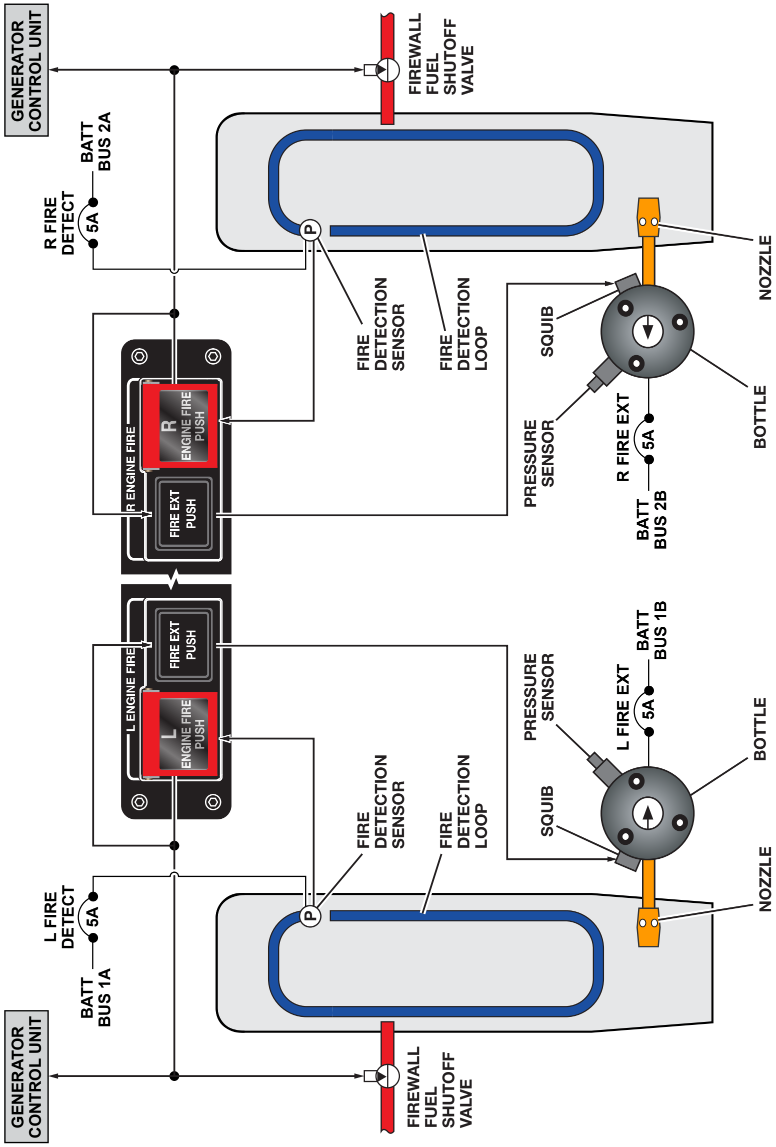
GENERATOR CONTROL UNIT
R FIRE DETECT
5A
BATT BUS 2A
FIREWALL FUEL SHUTOFF VALVE
P
FIRE DETECTION SENSOR
FIRE DETECTION LOOP
SQUIB
PRESSURE SENSOR
R FIRE EXT
5A
BATT BUS 2B
BOTTLE
NOZZLE
R ENGINE FIRE
R ENGINE FIRE PUSH
FIRE EXT PUSH
L ENGINE FIRE
L ENGINE FIRE PUSH
FIRE EXT PUSH
GENERATOR CONTROL UNIT
L FIRE DETECT
5A
BATT BUS 1A
FIREWALL FUEL SHUTOFF VALVE
P
FIRE DETECTION SENSOR
FIRE DETECTION LOOP
SQUIB
PRESSURE SENSOR
L FIRE EXT
5A
BATT BUS 1B
BOTTLE
NOZZLE

HYDRAULIC SYSTEM – SUPPLY

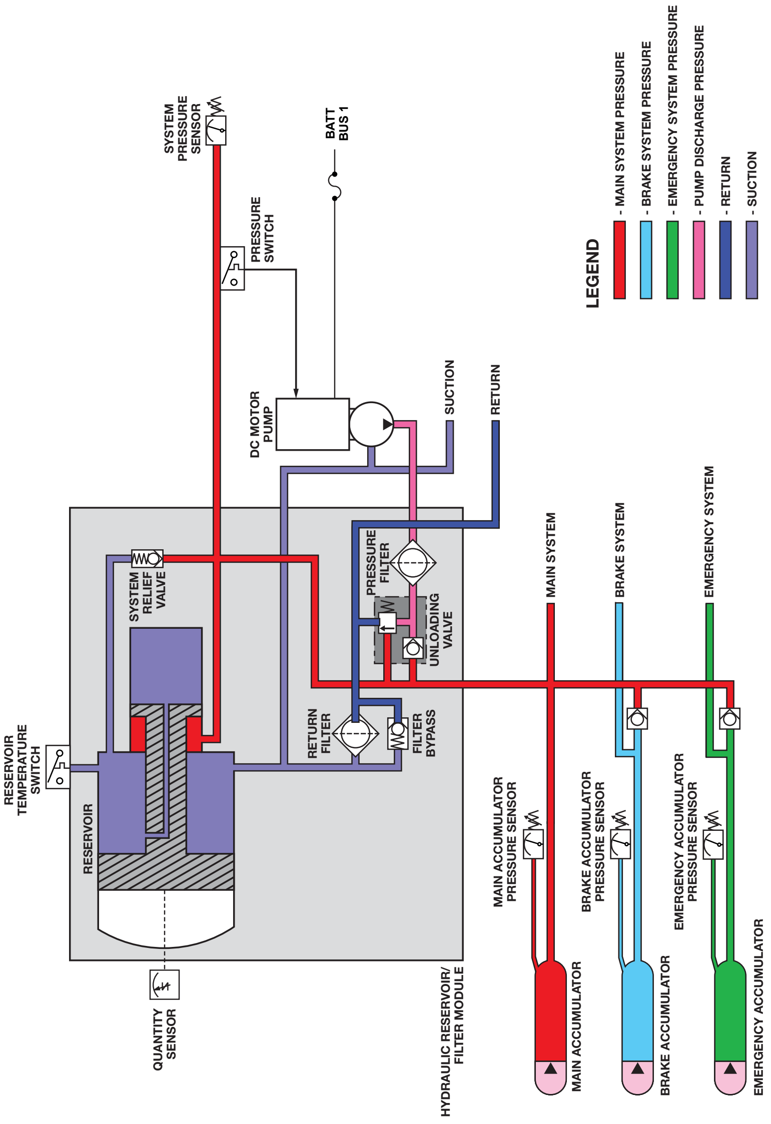
SYSTEM PRESSURE SENSOR
BATT BUS 1
PRESSURE SWITCH
DC MOTOR PUMP
SUCTION
RETURN
LEGEND
- MAIN SYSTEM PRESSURE
- BRAKE SYSTEM PRESSURE
- EMERGENCY SYSTEM PRESSURE
- PUMP DISCHARGE PRESSURE
- RETURN
- SUCTION
SYSTEM RELIEF VALVE
PRESSURE FILTER
UNLOADING VALVE
MAIN SYSTEM
BRAKE SYSTEM
EMERGENCY SYSTEM
RESERVOIR TEMPERATURE SWITCH
RESERVOIR
RETURN FILTER
FILTER BYPASS
MAIN ACCUMULATOR PRESSURE SENSOR
BRAKE ACCUMULATOR PRESSURE SENSOR
EMERGENCY ACCUMULATOR PRESSURE SENSOR
QUANTITY SENSOR
HYDRAULIC RESERVOIR/ FILTER MODULE
MAIN ACCUMULATOR
BRAKE ACCUMULATOR
EMERGENCY ACCUMULATOR

HYDRAULIC SYSTEM – MAIN

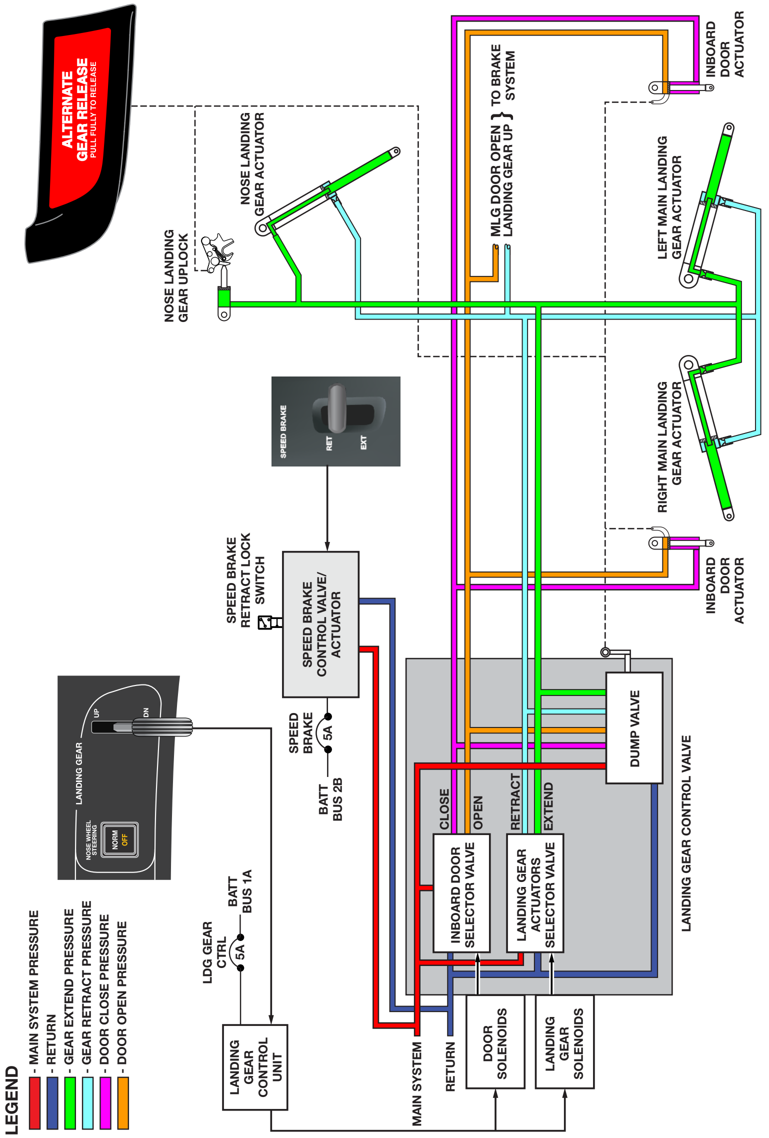
ALTERNATE GEAR RELEASE
PULL FULLY TO RELEASE
NOSE LANDING GEAR UPLOCK
NOSE LANDING GEAR ACTUATOR
MLG DOOR OPEN
LANDING GEAR UP
TO BRAKE SYSTEM
INBOARD DOOR ACTUATOR
LEFT MAIN LANDING GEAR ACTUATOR
RIGHT MAIN LANDING GEAR ACTUATOR
INBOARD DOOR ACTUATOR
SPEED BRAKE
RET
EXT
SPEED BRAKE RETRACT LOCK SWITCH
SPEED BRAKE CONTROL VALVE/ ACTUATOR
SPEED BRAKE
5A
BATT BUS 2B
DUMP VALVE
CLOSE
OPEN
RETRACT
EXTEND
INBOARD DOOR SELECTOR VALVE
LANDING GEAR ACTUATORS SELECTOR VALVE
LANDING GEAR CONTROL VALVE
LANDING GEAR
UP
DN
NOSE WHEEL STEERING
NORM
OFF
LDG GEAR CTRL
5A
BATT BUS 1A
LANDING GEAR CONTROL UNIT
MAIN SYSTEM
RETURN
DOOR SOLENOIDS
LANDING GEAR SOLENOIDS
LEGEND
🟥 - MAIN SYSTEM PRESSURE
🟦 - RETURN
🟩 - GEAR EXTEND PRESSURE
- GEAR RETRACT PRESSURE
🟪 - DOOR CLOSE PRESSURE
🟧 - DOOR OPEN PRESSURE

HYDRAULIC SYSTEM – BRAKES

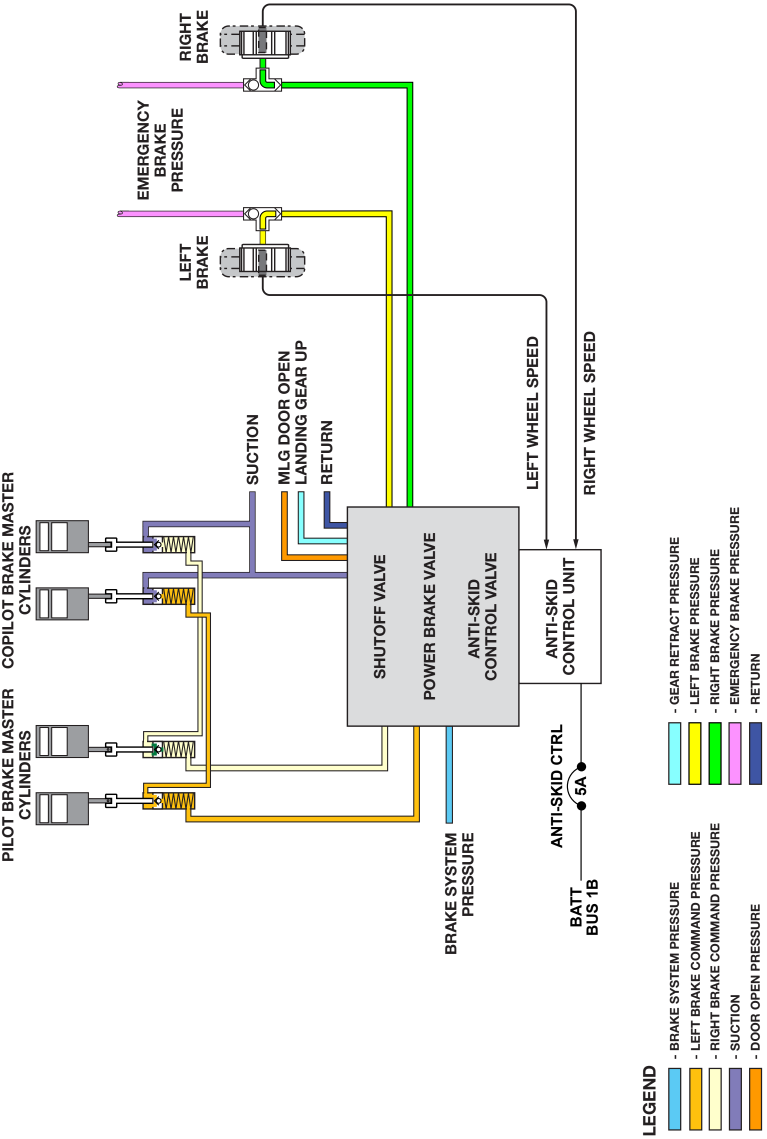
RIGHT BRAKE
EMERGENCY BRAKE PRESSURE
LEFT BRAKE
SUCTION
MLG DOOR OPEN LANDING GEAR UP
RETURN
LEFT WHEEL SPEED
RIGHT WHEEL SPEED
COPILOT BRAKE MASTER CYLINDERS
PILOT BRAKE MASTER CYLINDERS
SHUTOFF VALVE
POWER BRAKE VALVE
ANTI-SKID CONTROL VALVE
ANTI-SKID CONTROL UNIT
ANTI-SKID CTRL
5A
BATT BUS 1B
BRAKE SYSTEM PRESSURE
LEGEND
- BRAKE SYSTEM PRESSURE
- LEFT BRAKE COMMAND PRESSURE
- RIGHT BRAKE COMMAND PRESSURE
- SUCTION
- DOOR OPEN PRESSURE
- GEAR RETRACT PRESSURE
- LEFT BRAKE PRESSURE
- RIGHT BRAKE PRESSURE
- EMERGENCY BRAKE PRESSURE
- RETURN

HYDRAULIC SYSTEM – EMERGENCY

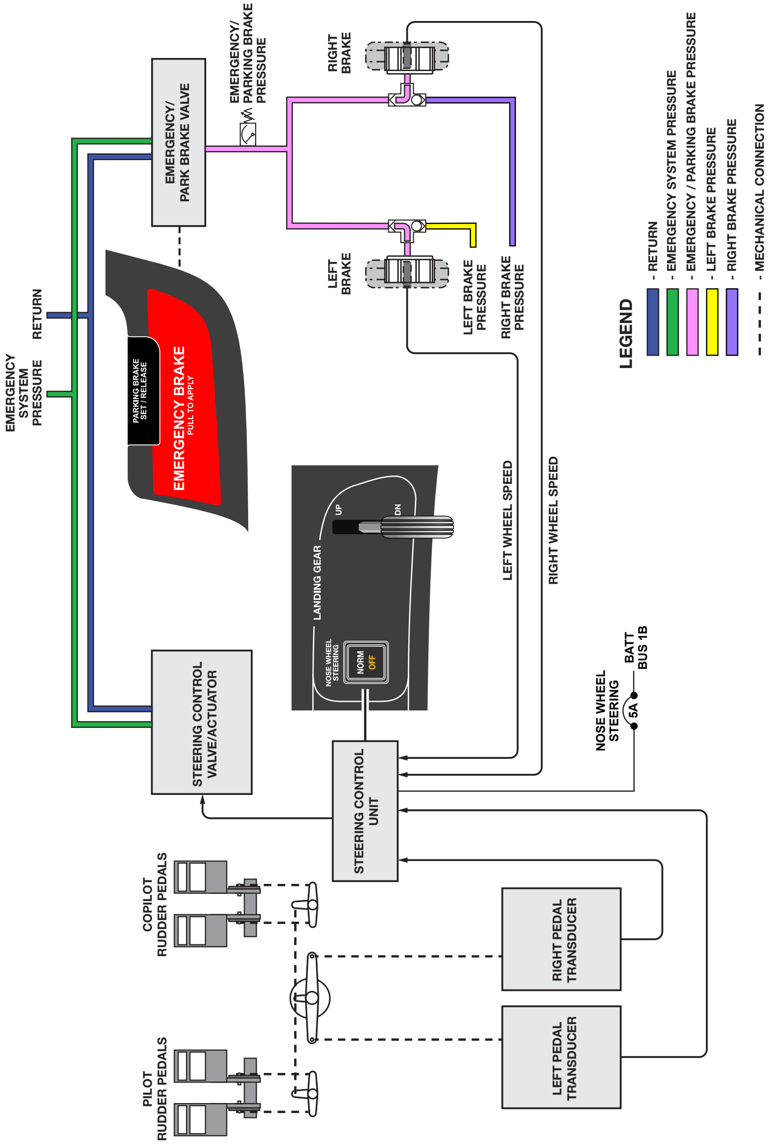
EMERGENCY SYSTEM PRESSURE
RETURN
EMERGENCY/ PARK BRAKE VALVE
EMERGENCY/ PARKING BRAKE PRESSURE
RIGHT BRAKE
LEFT BRAKE
LEFT BRAKE PRESSURE
RIGHT BRAKE PRESSURE
PARKING BRAKE SET / RELEASE
EMERGENCY BRAKE
PULL TO APPLY
LANDING GEAR
UP
DN
NOSE WHEEL STEERING
NORM
OFF
LEFT WHEEL SPEED
RIGHT WHEEL SPEED
STEERING CONTROL VALVE/ACTUATOR
STEERING CONTROL UNIT
NOSE WHEEL STEERING
5A
BATT BUS 1B
COPILOT RUDDER PEDALS
PILOT RUDDER PEDALS
RIGHT PEDAL TRANSDUCER
LEFT PEDAL TRANSDUCER
LEGEND
- RETURN
- EMERGENCY SYSTEM PRESSURE
- EMERGENCY / PARKING BRAKE PRESSURE
- LEFT BRAKE PRESSURE
- RIGHT BRAKE PRESSURE
- MECHANICAL CONNECTION

OXYGEN SYSTEM

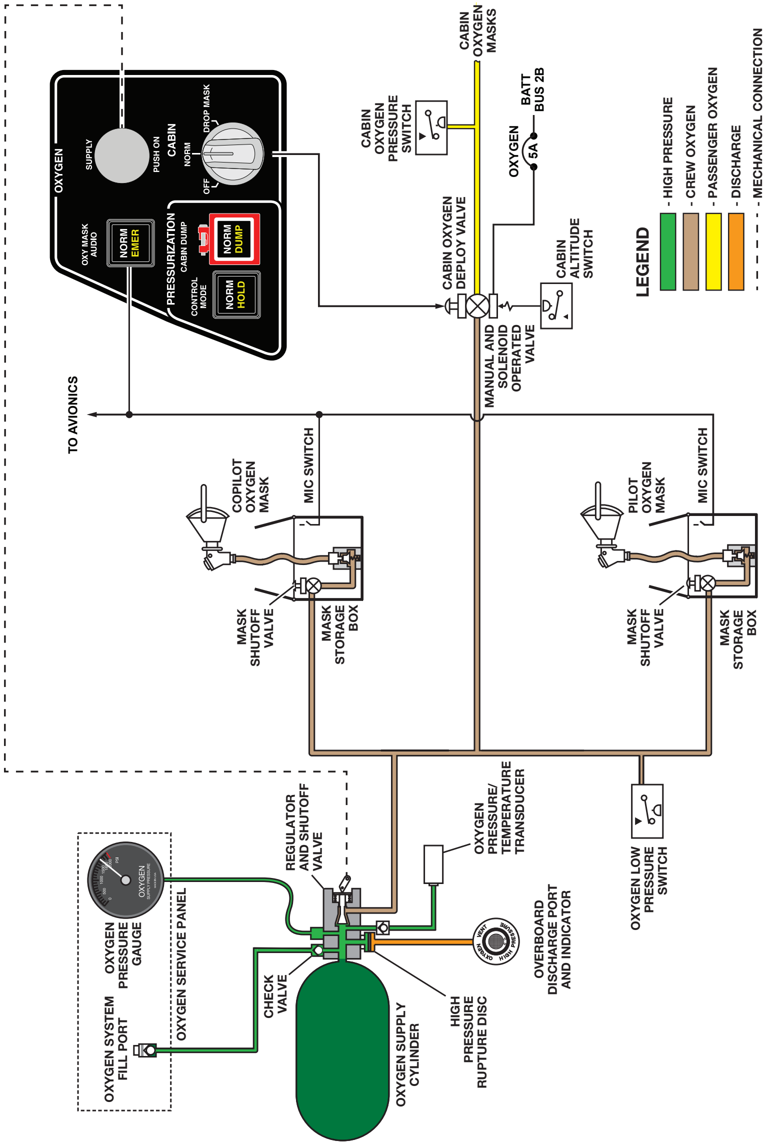
OXYGEN
SUPPLY
PUSH ON
CABIN
DROP MASK
NORM
OFF
OXY MASK AUDIO
NORM
EMER
PRESSURIZATION
CABIN DUMP
NORM
DUMP
CONTROL MODE
NORM
HOLD
TO AVIONICS
CABIN OXYGEN MASKS
CABIN OXYGEN PRESSURE SWITCH
BATT BUS 2B
OXYGEN
5A
CABIN OXYGEN DEPLOY VALVE
CABIN ALTITUDE SWITCH
MANUAL AND SOLENOID OPERATED VALVE
COPILOT OXYGEN MASK
MIC SWITCH
MASK SHUTOFF VALVE
MASK STORAGE BOX
PILOT OXYGEN MASK
MIC SWITCH
MASK SHUTOFF VALVE
MASK STORAGE BOX
LEGEND
🟩 - HIGH PRESSURE
🟫 - CREW OXYGEN
🟨 - PASSENGER OXYGEN
🟧 - DISCHARGE
- - - - MECHANICAL CONNECTION
REGULATOR AND SHUTOFF VALVE
OXYGEN PRESSURE/ TEMPERATURE TRANSDUCER
OXYGEN LOW PRESSURE SWITCH
OXYGEN PRESSURE GAUGE
OXYGEN SYSTEM FILL PORT
OXYGEN SERVICE PANEL
CHECK VALVE
OXYGEN SUPPLY CYLINDER
HIGH PRESSURE RUPTURE DISC
OVERBOARD DISCHARGE PORT AND INDICATOR
OXYGEN
HIGH PRESSURE
VENT

THIS PAGE INTENTIONALLY LEFT BLANK

EMERGENCY/ABNORMAL/ADVISORY CAS INDEX

CAS MESSAGES	TAB
ADF FAIL	1
ADS B OUT 1(2) FAIL	1
AFCS FAULT	1
AFCS PITCH SERVO OFF	1
AFCS ROLL SERVO OFF	1
AFCS YAW SERVO OFF	1
AFT BAG DOOR OPEN	3
AFCS MISTRIM	1
AFT BAG DOOR UNSAFE	11
1(2) AHRS FAIL	1
AIR DATA 1(2) FAULT	1
1(2) AIR DATA FAIL	1
ANTI-SKID FAIL	42
L(R) AUDIO FAIL	2
AUTOPILOT FAIL	1
AUTOPILOT FAULT	1
AVIONICS COMPUTER 1 FAIL	2
AVIONICS COMPUTER 2 FAIL	3
AVIONICS CONFIG	1
AVIONICS FAULT	1
BATTERY BUS 1 FAIL	13
BATTERY BUS 1A FAIL	14
BATTERY BUS 1B FAIL	15
BATTERY BUS 1C FAIL	16
BATTERY BUS 2 FAIL	16

CAS MESSAGES	TAB
BATTERY BUS 2A FAIL	17
BATTERY BUS 2B FAIL	18
BATTERY BUS 2C FAIL	19
BATTERY OFF	3
BATTERY 1(2) FAIL	3
BATTERY 1(2) FAULT	3
BUS TIE FAIL	19
BUS TIE OPEN	3
CABIN ΔP HIGH	4
CABIN ALT ABOVE 10K	3
CABIN ALT CTRL FAIL	27
CABIN ALT CTRL FAULT	27
CABIN ALT DUMP	3
CABIN ALT FAULT	3
CABIN ALT HIGH	4
CABIN ALT HIGH FIELD	27
CABIN ALT HOLD	3
L(R) CABIN BLEED FAIL	27
L(R) CABIN BLEED FAULT	3
L(R) CABIN BLEED LEAK	5
L(R) CABIN BLEED TEMP HIGH	28
CABIN BUS FAIL	3
CABIN DOOR OPEN	3
CABIN DOOR UNSAFE	11
L(R) CABIN INFLOW OFF	4
CABIN OXYGEN OFF	27

Continued on Next Page

CAS MESSAGES	TAB
CABIN OXYGEN ON	4
CABIN POWER OFF	3
COM 1(2) TEMP HIGH	1
CONFIG BRAKE	1
CONFIG FLAP	1
CONFIG PITCH TRIM	1
CONFIG SPEEDBRAKE	1
CONFIG WING ANTI-ICE	1
CPDLC FAIL	3
CPDLC TEMP HIGH	2
CRUISE SPD CTRL FAIL	2
CVR FAIL	2
DATA ACQUISITION 1 FAIL	4
DATA ACQUISITION 2 FAIL	5
DATA ACQUISITION 3 FAIL	6
DATA CONCENTRATOR 1 FAIL	7
DATA CONCENTRATOR 2 FAIL	8
DME FAIL	2
ECS AIR COND FAIL	28
ECS AIR COND FAULT	4
ECS GND COOLING FAN FAIL	28
ECS TEMP CONTROL MANUAL	4
ELEC EMER POWER	1
ELEC SRVC DOOR OPEN	3
EMER BRAKE FAIL	5
EMER EXIT DOOR UNSAFE	11

CAS MESSAGES	TAB
L(R) ENG ANTI-ICE FAIL	34
L(R) ENG ANTI-ICE FAULT	5
L(R) ENG BLEED FAIL	28
L(R) ENG BLEED FAULT	4
L(R) ENG BLEED LEAK	5
L(R) ENG BLEED OFF	4
L(R) ENG CHIP DETECTED	3
L(R) ENG CONTROL FAIL	24
L(R) ENG CONTROL FAULT	25
L(R) ENG EXCEEDANCE	2
L(R) ENG FAULT	3
L(R) ENGINE FIRE	12
L(R) ENGINE FLAMEOUT	2
L-R ENGINE FLAMEOUT	3
L(R) ENG FUEL BYPASS	3
L-R ENG FUEL BYPASS	25
L(R) ENG OIL PRESS LOW	3
L(R) ENG OIL TEMP HIGH	25
L(R) ENG OVERSPD PROT FAIL	26
L(R) ENG SHUTDOWN	3
L(R) ENG START FAIL	24
ENG SYNC FAIL	3
L(R) ENG TLD	3
L(R) ENG VIB DETECTOR FAIL	3
L(R) ENG VIBRATION HIGH	3
EXT LIGHTS MAN OFF	6

Continued on Next Page

CAS MESSAGES	TAB
EXT PWR DOOR OPEN	3
EXT PWR DOOR UNSAFE	11
FDR FAIL	2
L(R) FIRE BOTTLE DISCH	3
L(R) FIRE BOTTLE LOW	3
L(R) FIRE DETECTOR FAIL	26
L(R) FIRE EXT FAIL	3
FLAP DEGRADE	4
FLAP FAIL	30
FLAP FAULT	30
FLAP LEVER DISAGREE	4
FLT DIR MODE CHANGE	8
FUEL CROSSFEED	31
FUEL CROSSFEED FAIL	31
FUEL CROSSFEED OPEN	4
FUEL IMBALANCE	31
FUEL ISO VALVE CLOSED	4
FUEL ISO VALVE OPEN	4
FUEL LEVEL CTRL FAULT	31
L-R FUEL PRESSURE LOW	32
L(R) FUEL PRESSURE LOW	32
L(R) FUEL PUMP FAIL	32
L(R) FUEL PUMP OFF	4
L(R) FUEL PUMP ON	4
L(R) FUEL QTY DEGRADE	4
FUEL QTY FAULT	33

CAS MESSAGES	TAB
L-R FUEL QTY LOW	33
L(R) FUEL QTY LOW	33
L(R) FUEL SOV CLOSED	4
L(R) FUEL SOV FAIL	4
FUEL TEMP HIGH	33
FUEL TEMP LOW	33
FWD BAG DOOR OPEN	3
FWD BAG DOOR UNSAFE	12
L(R) GENERATOR FAIL	19
L(R) GENERATOR FAULT	3
L(R) GENERATOR OFF	3
L(R) GENERATOR OVERLOAD	20
GLIDE-SLOPE 1(2) FAIL	2
HYD FLUID LEVEL LOW	5
HYD FLUID OVERFILL	5
HYD PRESSURE LOW	34
HYD PUMP FAIL	34
HYD PUMP FAIL ON	5
ICE DETECTED	5
ICE DETECT FAIL	35
ICE DETECT FAULT	5
ICE PROT NOT ACTIVE	36
LDG GEAR DOOR FAIL	6
LDG GEAR FAIL	42
LDG GEAR UNSAFE	8
LIGHTING CONTROL 1(2) FAIL	6

Continued on Next Page

	CAS MESSAGES	TAB
	MAIN BUS 1 FAIL	20
	MAIN BUS 2 FAIL	21
	MAINTENANCE MODE	2
L(R)	MIC STUCK ON	2
	NO LDG FIELD ELEV	29
	NORMAL BRAKES FAIL	8
	NOSEWHEEL STEER FAIL	43
	NOSEWHEEL STEER FAULT	6
	NOSEWHEEL STEER OFF	6
	OXYGEN LOW	29
	OXYGEN QTY FAIL	29
	OXYGEN QTY FAULT	4
	OXYGEN UNAVAILABLE	29
	PARKING BRAKE FAIL	43
	PARKING BRAKE ON	44
	PITCH TRIM FAIL	30
	PITCH TRIM FAULT	4
	POWER OUTLETS MAN ON	3
L(R)	PROBE HEAT FAIL	36
	ROLL TRIM FAIL	4
	ROLL TRIM FAULT	4
	ROLL TRIM OFF	4
	RUDDER BIAS FAIL	9
	RUDDER BIAS FAULT	2
	SATCOM FAIL	2
	SPEEDBRAKE EXTENDED	30

CAS MESSAGES	TAB
SPEEDBRAKE FAIL	4
STALL PUSHER FAIL	9
STALL SHAKER FAIL	2
STALL WARN ICE ADVANCE	2
STALL WARN MISCOMP	9
STBY AHRS FAIL	2
STBY AIR DATA FAIL	2
STBY PITCH TRIM ON	4
STBY PROBE HEAT FAIL	36
SURFACEWATCH FAIL	2
TAIL DE-ICE FAIL	37
TAIL DEICE FAIL ON	5
TAIL DEICE FAULT	5
TAIL DEICE OFF	5
TAIL DEICE ON	5
TAKEOFF CONFIG	18
TRANSPONDER 1(2) FAIL	2
TRANSPONDER MODE	9
WEATHER RADAR FAIL	2
WINDSHEAR FAIL	2
L-R WING A/I TEMP LOW	38
WING ANTI-ICE FAIL	37
WING ANTI-ICE FAIL ON	37
WING ANTI-ICE FAULT	5
WING ANTI-ICE OFF	5
WING ANTI-ICE ON	5

Continued on Next Page

CAS MESSAGES	TAB
L(R) WING ANTI-ICE OVERHEAT	37
L(R) WING ANTI-ICE TEMP LOW	39
WING ANTI-ICE UNAVAIL	40
WING BLEED LEAK	6
WING FLOW FROM L(R)	5
WOW FAULT	6
L(R) WSHD ZONE FAIL	40
L(R) WSHD ZONE FAULT	5
L(R) WSHD ZONE OFF	5
L(R) WSHD ZONE OVERHEAT	40
XM DATALINK FAIL	3
YAW DAMPER FAIL	10
YAW DAMPER FAULT	3
YAW DAMPER OFF	10
YAW TRIM FAIL	5
YAW TRIM FAULT	5
YAW TRIM OFF	5